US	UNITED STATES

Diagram / Parts List

XLT05

Cordless Angle Impact Wrench

2026/01

(US) XLT05 / Cordless Angle Impact Wrench

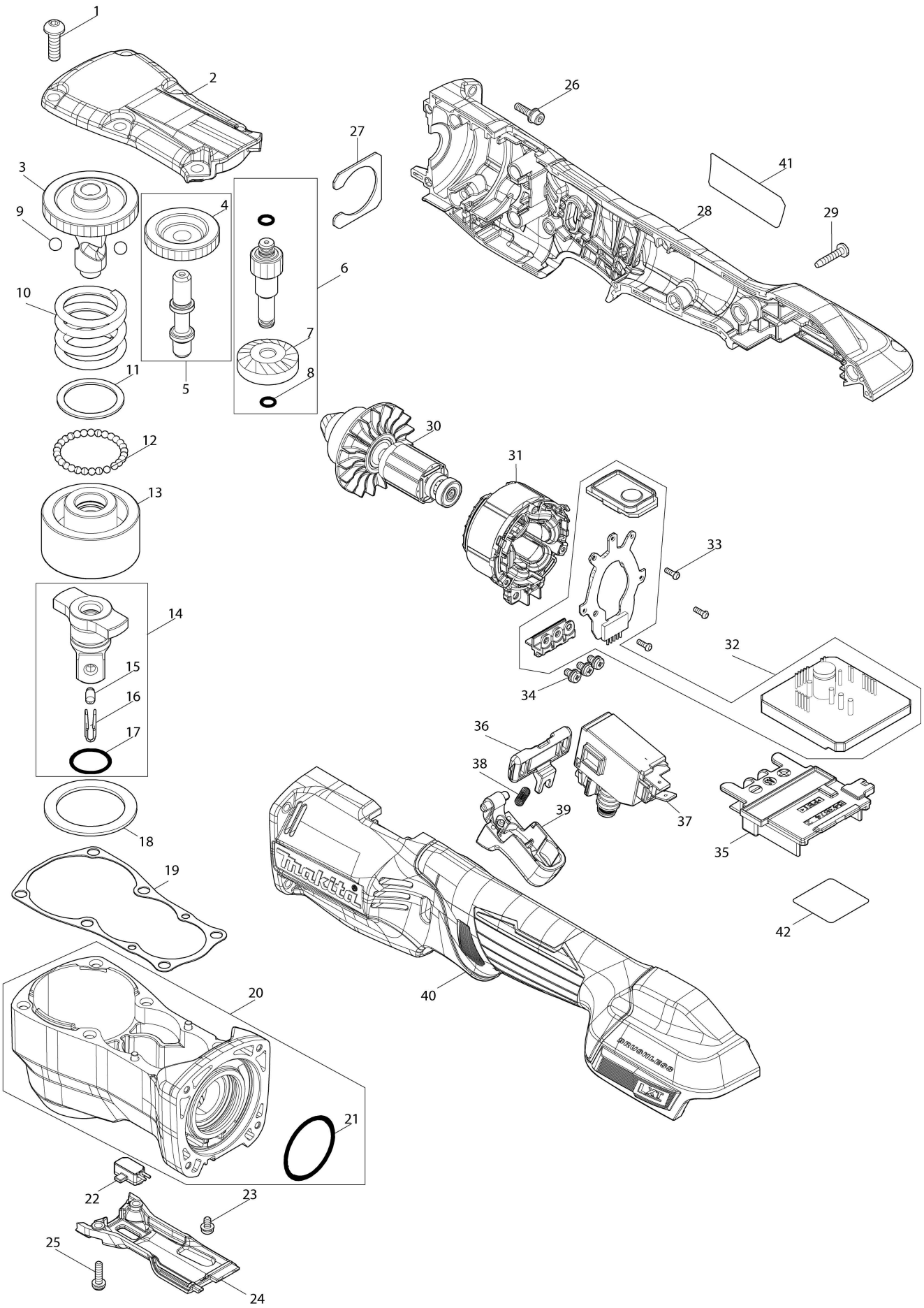

US	UNITED STATES

XLT05 / Cordless Angle Impact Wrench

Item	Sub	Parts No.	Parts Description	Qty	I/C	E/C No.	Close No.	Remark
001		265E34-2	Hex. socket button head bolt M5X16	6				
002		1411P3-4	HEAD COVER COMPLETE	1				
003		327F38-9	SPINDLE	1				
004		227C28-3	SPUR GEAR 20	1				
005		137357-7	Spindle B assembly	1				
	D10		INC. 4					
006		137356-9	Spindle A assembly	1				
	D10		INC. 7,8					
007		227C25-9	SPIRAL BEVEL GEAR 26	1				
008		213021-5	O-ring 5	2				
009		216011-7	Steel ball 5.6	2				
010		232615-7	Compression spring 25	1				
011		267175-0	Flat washer 24	1				
012		216019-1	Steel ball 3	29				
013		327F39-7	HAMMER	1				
014		137394-1	Anvil assembly	1				
	D10		INC. 15-17					
015		327D10-9	Pin 4	1				
016		322045-1	Clip	1				
017		213A05-9	O-ring 16	1				
018		267354-0	Flat washer 31	1				
019		422C56-5	GASKET	1				
020		137359-3	Angle head assembly	1				
	D10		INC. 21					
021		213437-4	O-ring 28	1				
022		620S46-0	LED CIRCUIT	1				
023		652069-6	Flat head screw M3X6	1				
024		4132X5-5	COVER	1				
025		266816-5	Pan head screw M3X12 WR	2				
026		251510-2	Hex. socket head bolt M3X12 WRM	4				
027		347D88-6	PLATE	1				
028		1831N0-0	Housing set	1				
	C10	263005-3	Rubber pin 6	2				
	C20	8063C8-9	Caution label	1				
	D10		INC. 40					
029		266429-2	Binding head tapping screw 3X16	8				
030		619906-7	ROTOR	1				
031		629D61-1	STATOR	1				
032		620S54-1	CONTROLLER COMPLETE	1				
033		266490-9	Pan head tapping screw 2X6	3				
034		652069-6	Flat head screw M3X6	3				
035		643874-2	Terminal	1				
036		457469-3	F/R change lever	1				
037		650075-5	SWITCH C3JW-6B-PA-8	1				
038		231433-0	Compression spring 4	1				
039		4132W2-4	SWITCH LEVER	1				
040		1831N0-0	Housing set	1				
	C10	263005-3	Rubber pin 6	2				
	C20	8063C8-9	Caution label	1				
	D10		INC. 28					
041		8151S2-0	Name plate XLT05	1				
042		8151S5-4	Serial No. label XLT05	1				

Interchange
O : Yes
X : No
< : the new part can be substituted for the current.
> : the current part can be substituted for the new.
S : Interchangeable as a set.