Parts Breakdown SH01W

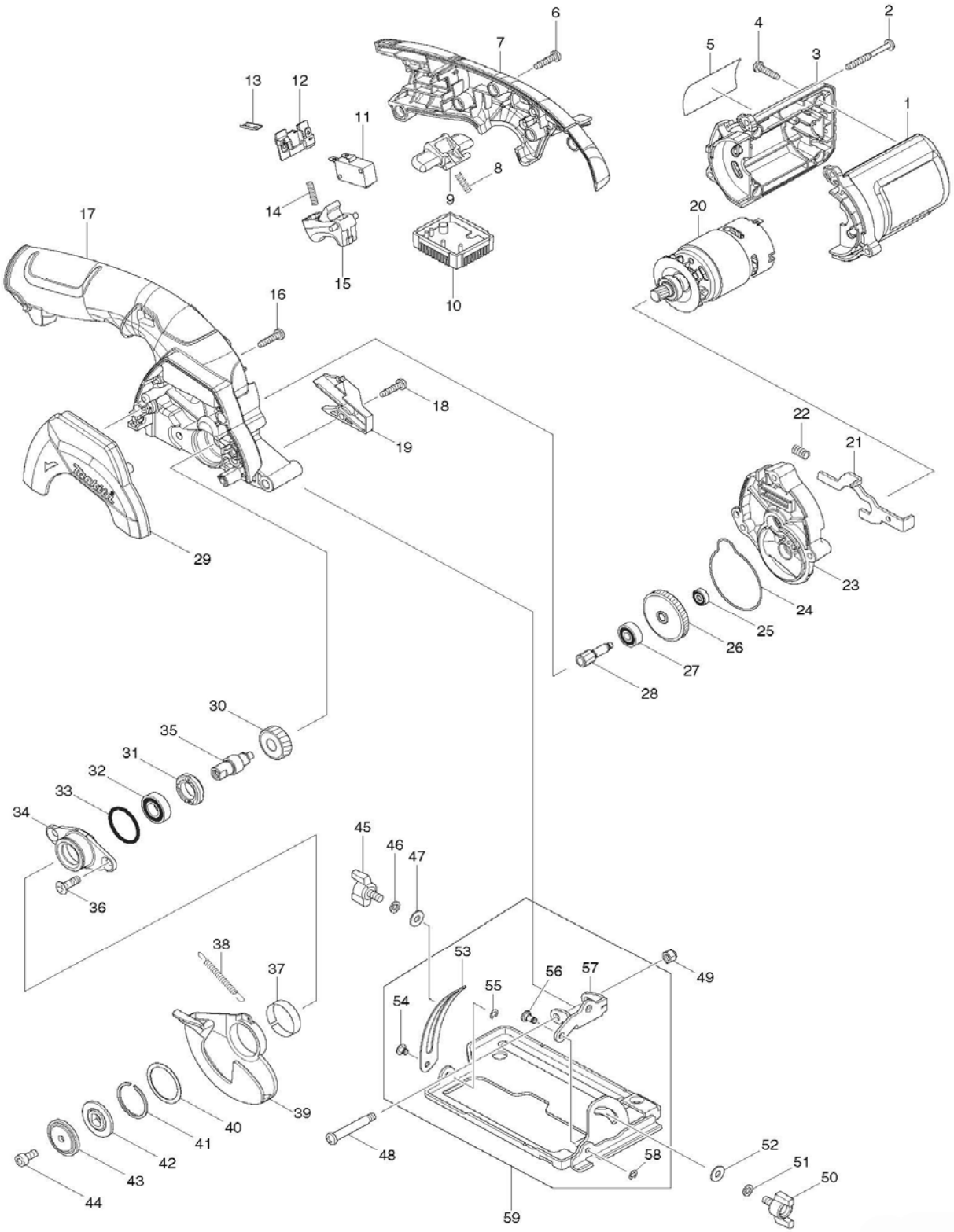

Products with multiple versions are listed in subsiding order with the newest version on top not indented

Fig. #	Part ID	Part Name	Quantity
1	188967-3	MOTOR HOUSING SET	1
1	891089-7	CAUTION LABEL	1
2	266560-4	TAPPING SCREW 4X40	3
3	188967-3	MOTOR HOUSING SET	1
3	891089-7	CAUTION LABEL	1
4	265995-6	TAPPING SCREW 4X18	4
5	868569-8	SH01 NAME PLATE	1
6	265995-6	TAPPING SCREW 4X18	5
7	188965-7	HANDLE SET	1
7	263002-9	RUBBER PIN 4	1
7	263005-3	RUBBER PIN 6	1
8	231469-9	COMPRESSION SPRING 4	1
9	419664-3	LOCK OFF LEVER	1
10	620015-7	CONTROLLER	1
11	651891-8	SWITCH V-15-3A6	1
12	643830-2	TERMINAL	1
13	345998-7	SET PLATE	1
14	231469-9	COMPRESSION SPRING 4	1
15	419665-1	SWITCH LEVER	1
16	265995-6	TAPPING SCREW 4X18	2
17	188965-7	HANDLE SET	1
17	263002-9	RUBBER PIN 4	1
17	263005-3	RUBBER PIN 6	1
18	265995-6	TAPPING SCREW 4X18	1
19	452234-5	DUCT	1
20	629885-1	DC MOTOR	1
21	346337-4	SHAFT LOCK	1
22	233117-6	COMPRESSION SPRING 6	1
23	140617-8	GEAR HOUSING COMPLETE	1
23	213325-5	O RING 19	1
24	424358-7	PACKING	1
25	210036-3	BALL BEARING 604ZZ	1
26	227737-6	HELICAL GEAR 47	1
27	210028-2	BALL BEARING 606ZZ	1
28	227735-0	HELICAL GEAR 9B	1
29	452235-3	BLADE COVER	1
30	227736-8	HERICAL GEAR 28	1
31	285847-5	BEARING RETAINER 14-23	1
32	210069-8	BALL BEARING 6900DDW	1
33	213435-8	O RING 26	1
34	318660-7	BEARING BOX	1
35	325983-6	SPINDLE	1
36	265034-2	COUNTERSUNK HEAD SCREW M5X16	2
37	345470-9	THICKNESS RING	1
38	231867-7	TENSION SPRING 4	1
39	452236-1	SAFETY COVER	1
40	267127-1	FLAT WASHER 26	1
41	257938-2	RETAINING RING(EXT) WR-26	1
42	224435-3	INNER FLANGE 28	1

43	224177-9	OUTER FLANGE 28	1
44	922212-4	HEX. SOCKET HEAD BOLT M5X12	1
45	265760-3	THUMB SCREW M5X10	1
46	942101-7	SPRING WASHER 5	1
47	941101-4	FLAT WASHER 5	1
48	265056-2	PAN HEAD SCREW M5	1
49	252103-8	HEX. LOCK NUT M5-8	1
50	265760-3	THUMB SCREW M5X10	1
51	942101-7	SPRING WASHER 5	1
52	941101-4	FLAT WASHER 5	1
53	346338-2	DEPTH GUIDE	1
54	268004-0	PIN 4	1
55	961017-7	STOP RING E-3	1
56	268028-6	PIN 5	1
57	346339-0	ANGULAR GUIDE	1
58	961017-7	STOP RING E-3	1
59	135416-1	BASE ASSEMBLY	1
A01	783202-0	HEX. WRENCH 4	1
A02	A-95021	T.C.T. SAW BLADE 85X15X20T	1
A03	***DC10WB	DC10WB BATTERY CHARGER	1
A04	195332-9	BATTERY BL1014 SET	2