US	UNITED STATES

Diagram / Parts List

ML014G

CORDLESS TOWER LIGHT

2026/07

(US) ML014G / CORDLESS TOWER LIGHT

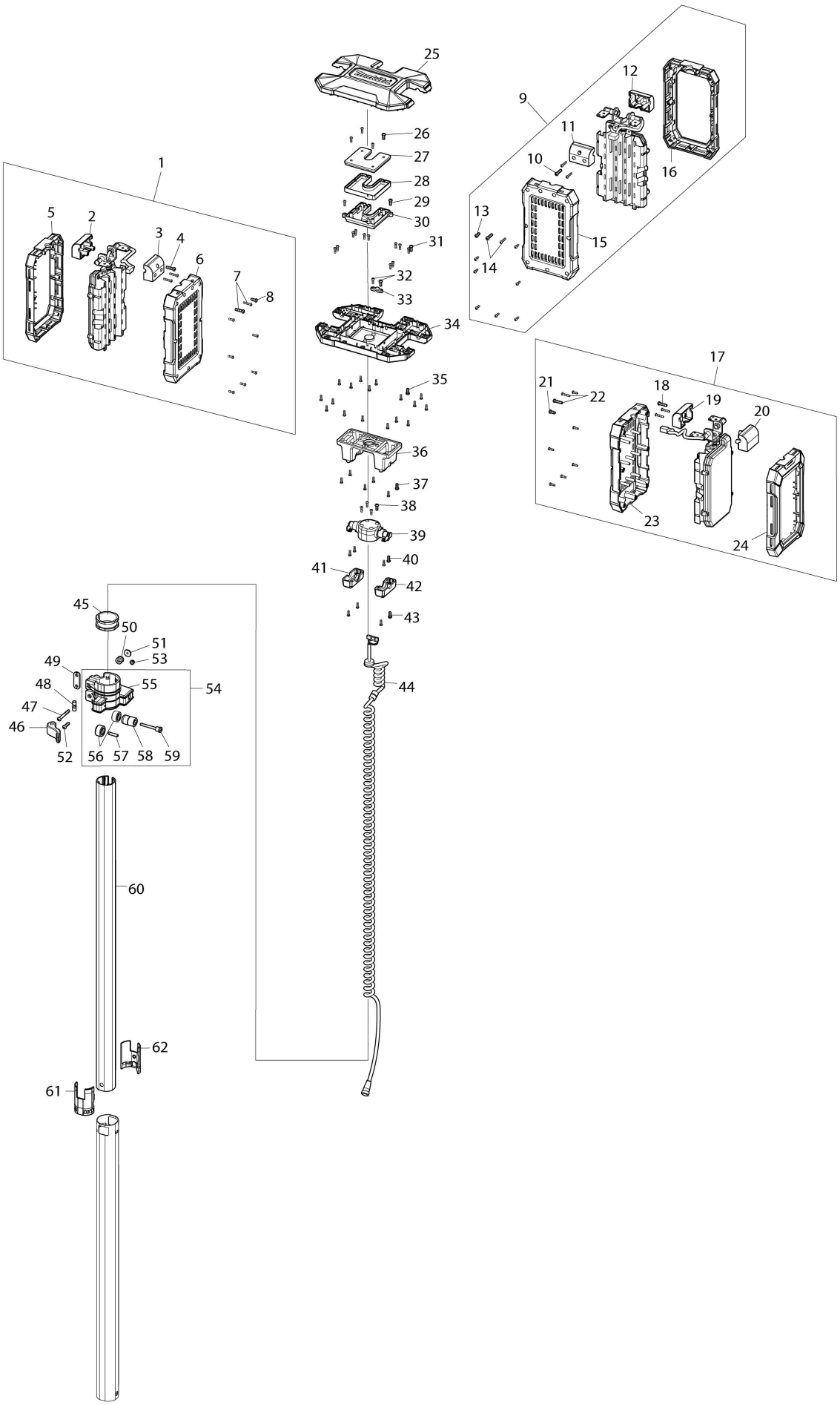

(US) ML014G / CORDLESS TOWER LIGHT

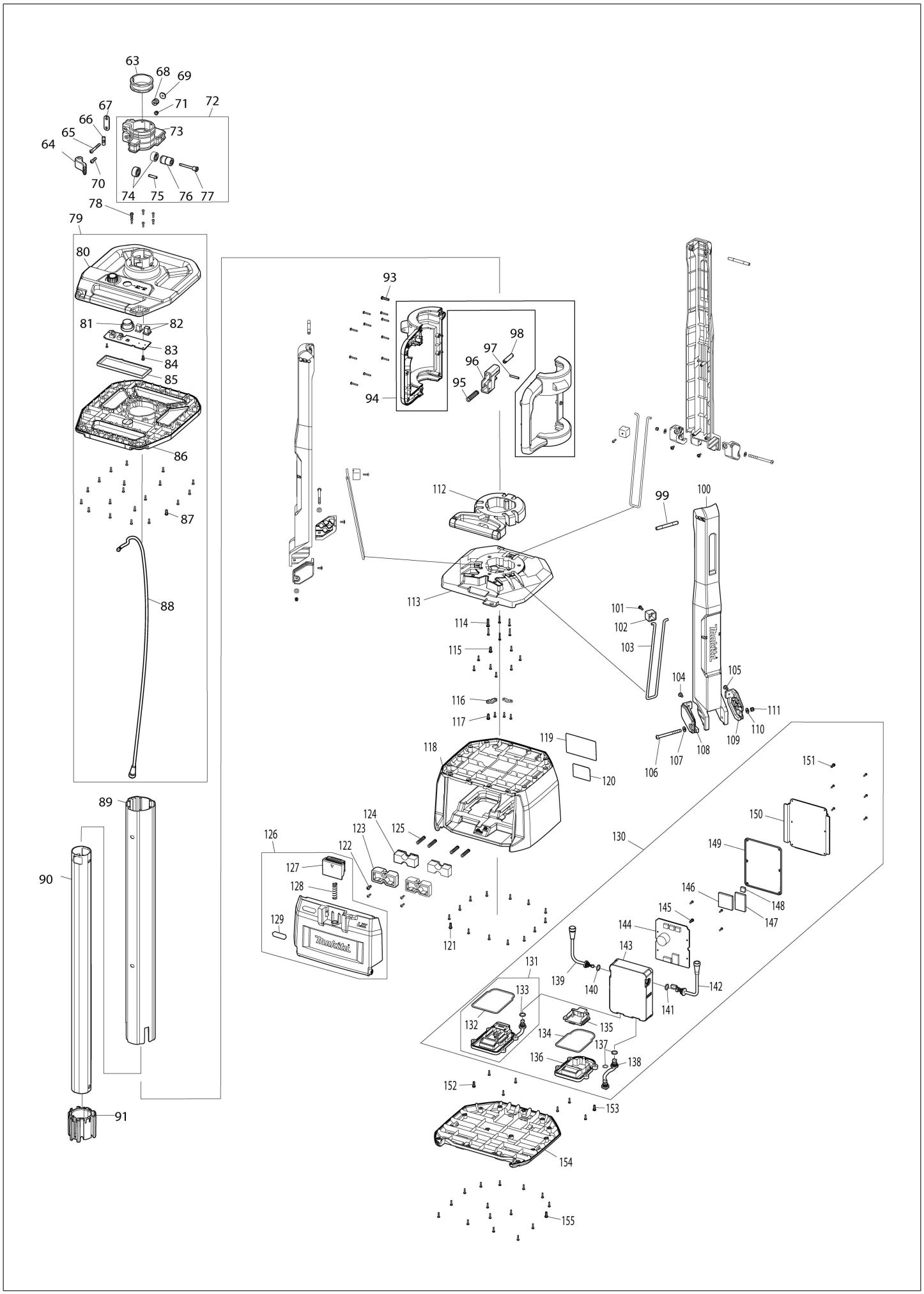

US	UNITED STATES

ML014G / CORDLESS TOWER LIGHT

Item	Sub	Parts No.	Parts Description	Qty	I/C	E/C No.	Close No.	Remark
001		TD00000304	LIGHT UNIT ASSY SAME L & R	1				
	D10		INC. 2-8					
002		TD00000219	UPPER HINGE COVER FOR LIGHT	1				
003		TD00000221	LOWER HINGE COVER FOR LIGHT	1				
004		TD00000223	TAPPING SCREW 3.5X17	3				
005		TD00000220	LIGHT HOUSING LED SIDE	1				
006		TD00000222	LIGHT HOUSING HEAT SINK SIDE	1				
007		TD00000223	TAPPING SCREW 3.5X17	2				
008		TD00000224	TAPPING SCREW 3.5X10 BLACK	7				
009		TD00000305	LIGHT UNIT ASSY FRONT SIDE	1				
	D10		INC. 10-16					
010		TD00000223	TAPPING SCREW 3.5X17	3				
011		TD00000221	LOWER HINGE COVER FOR LIGHT	1				
012		TD00000219	UPPER HINGE COVER FOR LIGHT	1				
013		TD00000224	TAPPING SCREW 3.5X10 BLACK	7				
014		TD00000223	TAPPING SCREW 3.5X17	2				
015		TD00000222	LIGHT HOUSING HEAT SINK SIDE	1				
016		TD00000220	LIGHT HOUSING LED SIDE	1				
017		TD00000304	LIGHT UNIT ASSY SAME L & R	1				
	D10		INC. 18-24					
018		TD00000223	TAPPING SCREW 3.5X17	3				
019		TD00000221	LOWER HINGE COVER FOR LIGHT	1				
020		TD00000219	UPPER HINGE COVER FOR LIGHT	1				
021		TD00000224	TAPPING SCREW 3.5X10 BLACK	7				
022		TD00000223	TAPPING SCREW 3.5X17	2				
023		TD00000222	LIGHT HOUSING HEAT SINK SIDE	1				
024		TD00000220	LIGHT HOUSING LED SIDE	1				
025		TD00000225	LAMP BASE UPPER SIDE	1				
026		TD00000224	TAPPING SCREW 3.5X10 BLACK	4				
027		TD00000226	TERMINAL BOX UPPER SIDE	1				
028		TD00000227	TERMINAL BOX GASKET	1				
029		TD00000224	TAPPING SCREW 3.5X10 BLACK	2				
030		TD00000228	TERMINAL BOX LOWER SIDE	1				
031		TD00000224	TAPPING SCREW 3.5X10 BLACK	12				
032		TD00000224	TAPPING SCREW 3.5X10 BLACK	2				
033		TD00000018	CORD CLAMP	1				
034		TD00000229	LAMP BASE LOWER SIDE	1				
035		TD00000325	TAPPING SCREW 3.5X12 BLACK	18			Y09709	
035-1		TD00000326	TAPPING SCREW 3.5X12 BLACK	18	X	Y09709		
036		TD00000230	LAMP BASE HINGE BASE	1				
037		TD00000224	TAPPING SCREW 3.5X10 BLACK	6				
038		TD00000224	TAPPING SCREW 3.5X10 BLACK	4				
039		TD00000231	LAMP BASE HINGE	1				
040		TD00000224	TAPPING SCREW 3.5X10 BLACK	4				
041		TD00000233	LAMP BASE HINGE CAP LEFT	1				
042		TD00000232	LAMP BASE HINGE CAP RIGHT	1				
043		TD00000224	TAPPING SCREW 3.5X10 BLACK	4				
044		TD00000234	SPIRAL CABLE	1				
045		TD00000133	BUSH B	1				
046		TD00000248	TENSIONER LEVER	1				
047		TD00000239	PAN HEAD SCREW M4X38	1				
048		TD00000138	PIN	1				
049		TD00000238	CONNECTOR WASHER FOR QR CO-...	1				
050		TD00000139	SPRING	1				
051		TD00000137	LOCK NUT	1				
052		TD00000240	PAN HEAD SCREW M4X16	1				
053		TD00000068	NUT M4	1				
054		TD00000306	ELEVATOR STOPER SMALL ASSY	1				
	D10		INC. 55-59					
055		TD00000241	ELEVATOR STOPPER SMALL BODY	1				
056		TD00000242	ROLLER WHEEL COMPLETE	2				
057		TD00000245	KNURLING PIN 4X21	1				
058		TD00000243	ONE WAY CLUTCH COMPLETE	1				
059		TD00000244	ONE WAY SHAFT	1				
060		TD00000235	UPPER PIPE	1				

Interchange
O : Yes
X : No
< : the new part can be substituted for the current.
> : the current part can be substituted for the new.
S : Interchangeable as a set.

US	UNITED STATES

ML014G / CORDLESS TOWER LIGHT

Item	Sub	Parts No.	Parts Description	Qty	I/C	E/C No.	Close No.	Remark
061		TD00000237	UPPER PIPE SPACER REAR SIDE	1				
062		TD00000236	UPPER PIPE SPACER FRONT SIDE	1				
063		TD00000132	BUSH A	1				
064		TD00000248	TENSIONER LEVER	1				
065		TD00000239	PAN HEAD SCREW M4X38	1				
066		TD00000138	PIN	1				
067		TD00000238	CONNECTOR WASHER FOR QR CO-...	1				
068		TD00000139	SPRING	1				
069		TD00000137	LOCK NUT	1				
070		TD00000240	PAN HEAD SCREW M4X16	1				
071		TD00000068	NUT M4	1				
072		TD00000307	ELEVATOR STOPER LARGE ASSY	1				
	D10		INC. 73-77					
073		TD00000249	ELEVATOR STOPPER LARGE BODY	1				
074		TD00000242	ROLLER WHEEL COMPLETE	2				
075		TD00000245	KNURLING PIN 4X21	1				
076		TD00000243	ONE WAY CLUTCH COMPLETE	1				
077		TD00000244	ONE WAY SHAFT	1				
078		TD00000224	TAPPING SCREW 3.5X10 BLACK	6				
079		TD00000308	CENTRAL CONTROL SYSTEM ASSY	1				
	D10		INC. 80-88					
080		TD00000250	SWITCH HOUSING UPPER SIDE ASSY	1				
081		TD00000252	SWITCH BUTTON	1				
082		TD00000251	LENZ	2				
083		TD00000253	SWITCH PCB	1				
084		TD00000255	TAPPING SCREW 3X10	2				
085		TD00000254	SWITCH PCB SECTION GASKET	1				
086		TD00000256	SWITCH HOUSING LOWER SIDE	1				
087		TD00000224	TAPPING SCREW 3.5X10 BLACK	20				
088		TD00000318	SWITCH-CONTRILLER CABLE	1				
089		TD00000263	LOWER PIPE	1				
090		TD00000246	CENTER PIPE	1				
091		TD00000247	CENTER PIPE CENTER SPACER	1				
093		TD00000223	TAPPING SCREW 3.5X17	10				
094		TD00000319	TRIPOD BASE SET	1				
095		TD00000261	COMPRESSION SPRING	1				
096		TD00000260	TRIPOD STOPPER LEVER	1				
097		TD00000262	PIN 3x23	1				
098		TD00000259	LOCK PIN 7X37 COMPLETE	1				
099		TD00000264	KNURLING PIN 6X58	3				
100		TD00000269	LEG	3				
101		TD00000224	TAPPING SCREW 3.5X10 BLACK	3				
102		TD00000028	CHECK BLOCK	3				
103		TD00000265	SUPPORT STAY FOR LEG	3				
104		TD00000266	FLANGED TAPPING SCREW 3.5X10	3				
105		TD00000266	FLANGED TAPPING SCREW 3.5X10	3				
106		TD00000270	PAN HEAD SCREW M5X62 INOX	3				
107		TD00000271	FLAT WASHER 5 INOX	3				
108		TD00000267	OUTSOLE LEFT	3				
109		TD00000268	OUTSOLE RIGHT	3				
110		TD00000271	FLAT WASHER 5 INOX	3				
111		TD00000272	HEX LOCK NUT M5 INOX	3				
112		TD00000273	BATTERY BOX HANDLE	1				
113		TD00000274	BATTERY BOX UPPER PANEL	1				
114		TD00000223	TAPPING SCREW 3.5X17	6				
115		TD00000275	TAPPING SCREW 3.5X10	8				
116		TD00000018	CORD CLAMP	2				
117		TD00000275	TAPPING SCREW 3.5X10	4				
118		TD00000276	BATTERY BOX	1				
119		TD00000278	WARNING LABEL US	1				
120		TD00000281	NAMEPLATE BR US VN	1				
121		TD00000275	TAPPING SCREW 3.5X10	14				
122		TD00000275	TAPPING SCREW 3.5X10	4				
123		TD00000284	BATTERY EJECTOR FIX RING	2				
124		TD00000283	BATTERY EJECTOR	2				

Interchange
O : Yes
X : No
< : the new part can be substituted for the current.
> : the current part can be substituted for the new.
S : Interchangeable as a set.

US	UNITED STATES

ML014G / CORDLESS TOWER LIGHT

Item	Sub	Parts No.	Parts Description	Qty	I/C	E/C No.	Close No.	Remark
125		TD00000282	COMPRESSION SPRING	4				
126		TD00000311	BATTERY BOX LID ASSY	1				
	D10		INC. 127-129					
127		TD00000285	BATTERY BOX LATCH	1				
128		TD00000286	COMPRESSION SPRING	1				
129		8025F3-0	XGT logo label	1				
130		TD00000313	MAIN CONTROLLER PCB ASSY	1				
	D10		INC. 131,134-151					
131		TD00000287	BATTERY TERMINAL XGT ASSY	1				
	D10		INC. 132,133					
132		TD00000288	GASKET FOR XGT TERMINAL	1				
133		TD00000289	SILICONE RING 10	1				
134		TD00000291	GASKET FOR LXT TERMINAL	1				
135		TD00000292	BATTERY TERMINAL LXT	1				
136		TD00000290	FIX PLATE FOR LXT TERMINAL	1				
137		TD00000289	SILICONE RING 10	2				
138		TD00000320	CABLE ASSY FOR LXT TERMINAL	1				
139		TD00000321	CABLE ASSY FOR CONT.PANEL 6PIN	1				
140		TD00000289	SILICONE RING 10	1				
141		TD00000289	SILICONE RING 10	1				
142		TD00000322	CABLE ASSY FOR LIGHT 7PIN	1				
143		TD00000295	MAIN CONTROLLER PCB HOUSING	1				
144		TD00000297	MAIN CONTROLLER PCB	1				
145		TD00000255	TAPPING SCREW 3X10	4				
146		TD00000324	THERMAL CONDUCTIVE SHEET 36X36	1				
147		TD00000323	THERMAL CONDUCTIVE SH. 43.5X26	1				
148		TD00000300	THERMAL CONDUCTIVE SHEET 10X10	1				
149		TD00000301	GASKET FOR CONT, PCB HOUSING	1				
150		TD00000302	HEAT SINK FOR CONT, PCB	1				
151		TD00000255	TAPPING SCREW 3X10	6				
152		TD00000275	TAPPING SCREW 3.5X10	4				
153		TD00000275	TAPPING SCREW 3.5X10	4				
154		TD00000303	BATTERY BOX LOWER PANEL	1				
155		TD00000275	TAPPING SCREW 3.5X10	15				
A01		TD00000002	SHOULDER BELT	1				

Interchange
O : Yes
X : No
< : the new part can be substituted for the current.
> : the current part can be substituted for the new.
S : Interchangeable as a set.