Parts Breakdown

HM0870C

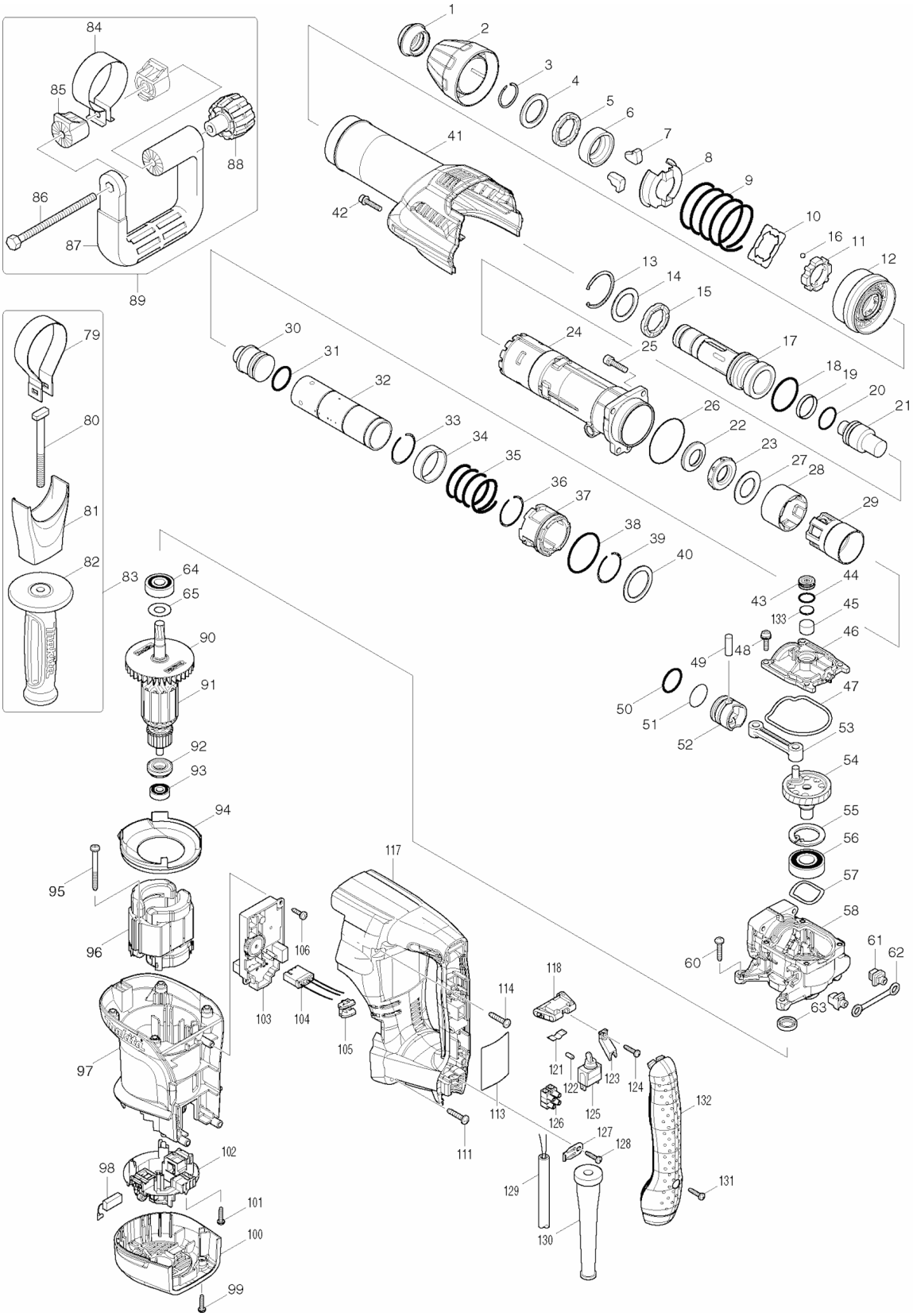

Products with multiple versions are listed in subsiding order with the newest version on top not indented

Fig #	Part ID	Part Name	Quantity
1	286287-0	TOOL HOLDER CAP, HM0870C	1
2	451432-8	CHUCK COVER, HM0870C	1
3	231984-3	RING SPRING 25, HR5001C	1
4	267272-2	FLAT WASHER 28, HM0860C	1
5	424261-2	RUBBER RING 28, HM0870C	1
6	331659-5	CHUCK RING, HM0860C	1
7	310108-5	TOOL RETAINER, HM0860C	2
8	346677-0	SPRING GUIDE, HM0870C	1
	345360-6	SPRING GUIDE, HM0860C	
9	233387-7	COMPRESSION SPRING 52, HM0860C	1
10	346141-1	PLATE, HM0870C	1
11	310145-9	LOCK RING, HM0860C	1
12	451433-6	CHANGE RING, HM0870C	1
13	257960-9	RETAINING RING (INT) ROUND R-42, HM0870C	1
14	267273-0	FLAT WASHER 29, HM0860C	1
15	424261-2	RUBBER RING 28, HM0870C	1
16	216002-8	STEEL BALL 4.8, WT01W	4
17	324387-9	TOOL HOLDER, HM0860C	1
18	213527-3	O RING 38, HM0860C	1
19	213431-6	FLUORIDE RING 28, HR5001C	1
20	213394-6	O RING 23, HR5001C	1
21	324389-5	IMPACT BOLT, HM0860C	1
22	325732-1	RING 20, HM0870C	1
23	424245-0	RUBBER RING 20, HM0870C	1
24	318512-2	BARREL, HM0870C	1
25	922341-3	H.S.H. BOLT M6X25, HM1100C	4
26	213656-2	O RING 53, AN451	1
27	267407-5	FLAT WASHER 23, HM0870C	1
28	451639-6	GUIDE RING, HM0860C	1
29	450098-1	SLIDE SLEEVE, HM0860C	1
30	324388-7	STRINKER, HM0860C	1
31	213958-6	O RING 24, HM0860C	1
32	331658-7	CYLINDER 32, HM0860C	1
33	233927-1	RING SPRING 34, HM0860C	1
34	331660-0	RING 36, HM0860C	1
35	233386-9	COMPRESSION SPRING 37, HM0860C	1
36	233927-1	RING SPRING 34, HM0860C	1
37	317719-7	CYLINDER GUIDE, HM0860C	1
38	213611-4	O RING 46, GD0810C	1
39	233927-1	RING SPRING 34, HM0860C	1
40	267079-6	FLAT WASHER 34, 6905H	1
41	451444-1	HOUSING COVER, HM0870C	1
42	922243-3	H. S. H. BOLT M5X25,2702	1
43	419988-7	FILTER CAP, HR2811F	1
44	213218-6	O RING 16, AF502,HR2811F	1
45	443129-3	FILTER, HR2811F	1
46	451434-4	CRANK CAP, HM0870C	1
47	424244-2	SEAL RING, HM0870C	1
48	911233-1	P.H. SCREW M5X20, TW1000	4
49	268104-6	PIN 8, HM0860C	1
50	213958-6	O RING 24, HM0860C	1
51	213432-4	O RING 26, HM0860C	1
52	418349-8	PISTON, HM0860C	1
53	418350-3	CONNECTING ROD, HM0860C	1
54	325735-5	CRANK SHAFT 17, HM0870C	1
55	962157-4	RETAINING RING R-40, GA7911	1
56	211281-3	BALL BEARING 6203LLU,HM0870C	1
57	267825-7	WAVE WASHER 30, HM0870C	1

58	140206-9	CRANK HOUSING CPL., HM0870C	1
60	266041-8	TAPPING SCREW, FLANGE 5X25, 5177B	4
61	419008-7	FIX GUIDE, HR4001C	2
62	423345-3	CUSHION PLATE, HR4001C	1
63	213133-4	OIL SEAL 12, HR2811F	1
64	211106-1	B. BEARING 6201LLB, 9227C	1
65	253759-0	WASHER 12, JS3200	1
79	346140-3	GRIP SPRING 70, HM0870C	1
80	266522-2	SQUARE BOLT M8X95, HM0870C	1
81	418363-4	SIDE GRIP BASE 60, HM0860C	1
82	158131-0	GRIP 36 CPL.,HR4010C	1
83	135332-7	GRIP 36 ASSEMBLY, HM0870C	1
90	240119-5	FAN 76, HM0870C	1
91	513791-9	ARMATURE ASS'Y, HM0870C	1
92	681650-6	INSULATION WASHER, HR4000C	1
93	210005-4	BALL BEARING 608DDW, LS1016L	1
94	451438-6	BAFFLE PLATE, HM0870C	1
95	266095-5	TAPPING SCREW 5X55, KP0810	2
96	625756-0	FIELD 115V, HR4041C	1
97	451423-9	MOTOR HOUSING, HM0870C	1
98	CB350	CARBON BRUSH SET, 195004-6	1
	195004-6	CARBON BRUSH SET, 195004-6	
99	265995-6	TAPPING SCREW 4X18, BO4556K	2
100	451442-5	REAR COVER, HM0870C	1
101	265995-6	TAPPING SCREW 4X18, BO4556K	4
102	638674-3	BRUSH HOLDER UNIT, HM0870C	1
103	631929-5	CONTROLLER, HM0870C	1
104	638675-1	LEAD UNIT, HM0870C	1
105	451428-9	LENS, HM0870C	1
106	266192-7	TAPPING SCREW 4X14, 2012NB	2
111	266041-8	TAPPING SCREW, FLANGE 5X25, 5177B	2
113	814H49-0	N/A	1
	867390-2	NAME PLATE, HM0870C	
114	266041-8	TAPPING SCREW, FLANGE 5X25, 5177B	2
117	140207-7	HANDLE CPL., HM0870C	1
118	451440-9	SLIDE LEVER, HM0870C	1
121	232209-8	LEAF SPRING, HM0860C	1
122	263027-3	RUBBER PIN 4, HM0860C	1
123	451427-1	SWITCH LEVER, HM0870C	1
124	265995-6	TAPPING SCREW 4X18, BO4556K	1
125	651418-4	SWITCH, 9564CV	1
126	654531-7	TERMINAL BLOCK 2P, 5007MG	1
127	687169-3	STRAIN RELIEF, HP1621F	1
128	265995-6	TAPPING SCREW 4X18, BO4556K	1
129	664276-9	CORD (2X16X16 SJ), HR5000	1
130	682560-0	CORD GUARD 10, HM1202C	1
131	265995-6	TAPPING SCREW 4X18, BO4556K	1
132	451445-9	HANDLE COVER, HM0870C	1
133	423411-6	RUBBER PLATE, HM0870C	1
	194683-7	HAMMER BIT GREASE 100ML, HM & HR SERIES	1
	443122-7	CLOTH F/WIPING OIL, HR4001C	1
	824905-8	PLASTIC TOOL CASE, HM0870C	1
	801F94-2	N/A	2
	809667-9	TOOL CASE LABEL, HM0870C	
	801G22-3	N/A	1