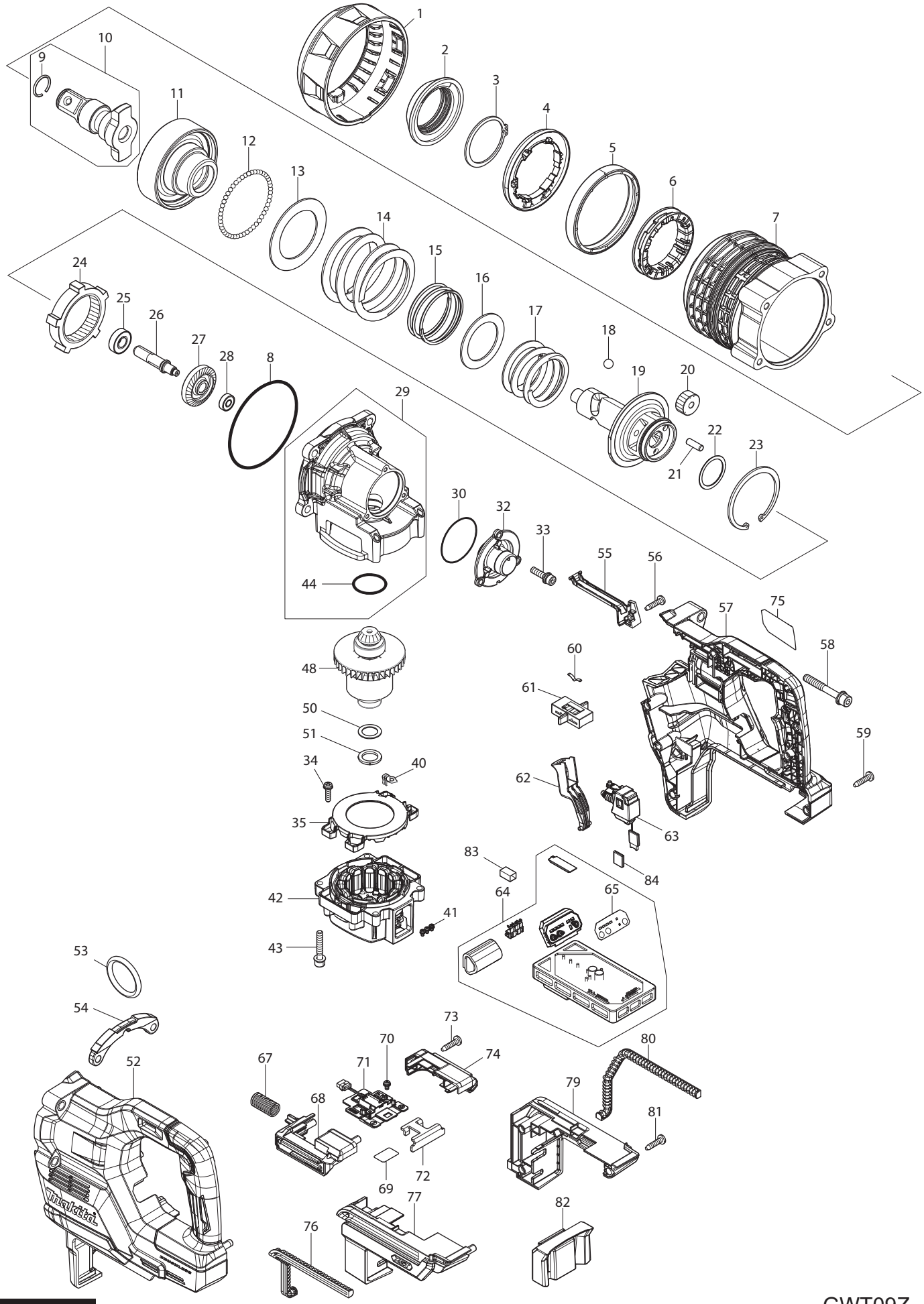
1
2
3
4
5
6
7
8
9
10
11
12
13
14
15
16
17
18
19
20
21
22
23
24
25
26
27
28
29
30
32
33
34
35
40
41
42
43
44
48
50
51
52
53
54
55
56
57
58
59
60
61
62
63
64
65
67
68
69
70
71
72
73
74
75
76
77
79
80
81
82
83
84

Model GWT09Z Parts List

Item#		Part#	Description	Q'ty
001		422B73-9	BUMPER A	1
002		422B66-6	BUMPER B	1
003		961254-3	RETAINING RING (EXT) S-58	1
004		620P36-5	LED CIRCUIT	1
005		422B71-3	BUFFER RUBBER A	1
006		422B72-1	BUFFER RUBBER B	1
007		141W72-5	HAMMER CASE COMPLETE	1
008		213914-6	O-RING 100	1
009		231921-7	RING SPRING 22	1
010		137143-6	ANVIL E ASS'Y	1
	D10		INC. 9	
011		327D89-0	HAMMER	1
012		216018-3	STEEL BALL 5.0	49
013		253609-9	FLAT WASHER 60A	1
014		232874-3	COMPRESSION SPRING 71	1
015		232875-1	COMPRESSION SPRING 61	1
016		253610-4	FLAT WASHER 48	1
017		232873-5	COMPRESSION SPRING51	1
018		216010-9	STEEL BALL 10.3	2
019		327D88-2	SPINDLE	1
020		227B64-3	SPUR GEAR 24	3
021		256197-5	PIN 7	3
022		267039-8	FLAT WASHER 32	1
023		962352-6	RETAINING RING R-75	1
024		227B58-8	INTERNAL GEAR 57	1
025		211131-2	BALL BEARING 6001DDW	1
026		227B63-5	SPUR GEAR 9	1
027		227B61-9	SPIRAL BEVEL GEAR 31	1
028		211021-9	BALL BEARING 607LLB	1
029		137146-0	INTERNAL GEAR CASE ASSY	1
	C10	263002-9	RUBBER PIN 4	1
	D10		INC. 44	
030		213604-1	O RING 50	1
032		137161-4	BEARING COVER ASSEMBLY	1
	C10	263002-9	RUBBER PIN 4	1
033		266903-0	HEX.S.HEAD BOLT M5X20 WITH WR	3
034		911128-8	P.H.SCREW M4X16 WITH WR	4
035		4130L1-7	BUFFLE PLATE	1
041-1		652077-7	FLAT HEAD SCREW M3X6	3
042-2		1412A8-5	MOTOR HOUSING COMPLETE	1
043		265D24-9	H. S. H. BOLT M5X30 WITH WRM	4
044		213460-9	O RING 35	1
048		519860-4	ROTOR ASS'Y	1
050		253198-4	FLAT WASHER 18	1
051		261129-9	URETHANE WASHER 18	1
052		1830L3-4	HOUSING SET	1
	D10		INC. 57	
053		282022-4	RING 40	1
054		162D36-2	BRACKET	1
055		4130L2-5	LEAD COVER	1
056		266326-2	TAPPING SCREW 4X18	1

057		1830L3-4	HOUSING SET	1
	D10		INC. 52	
058		265D71-0	H.S.H.BOLT M8X60 WITH WRM	4
059		266326-2	TAPPING SCREW 4X18	12
060		232872-7	LEAF SPRING	1
061		141W75-9	F/R CHANGE LEVER COMPLETE	1
062		4130L3-3	SWITCH LEVER	1
063		141W69-4	SWITCH COMPLETE	1
064		137160-6	CONTROLLER ASS'Y	1
	D10		INC. 65	
065		8012S9-8	SWITCH LABEL	1
067		232650-5	COMPRESSION SPRING 13	1
068		1830L0-0	BATTERY HOLDER SET	1
	C10	263005-3	RUBBER PIN 6	2
	D10		INC. 74	
069		8146F9-2	GWT09 SERIAL NO.LABEL	1
070		652031-1	PAN HEAD SCREW M3X6	2
071		632T08-2	TERMINAL UNIT	1
072		347C62-8	SUPPORT PLATE	1
073		266326-2	TAPPING SCREW 4X18	2
074		1830L0-0	BATTERY HOLDER SET	1
	C10	263005-3	RUBBER PIN 6	2
	D10		INC. 68	
075		8146F7-6	GWT09 NAME PLATE	1
076		422B69-0	CUSHION RUBBER L	1
077		1830L1-8	BATTERY HOUSING SET	1
	D10		INC. 79	
079		1830L1-8	BATTERY HOUSING SET	1
	D10		INC. 77	
080		422B70-5	CUSHION RUBBER R	1
081		266326-2	TAPPING SCREW 4X18	3
082		422642-4	CUSHION RUBBER	1
083		685725-3	SPONGE SHEET	1
084		424248-4	SPONGE SHEET 15-25	1
A01		122G63-9	SIDE HANDLE ASSEMBLY	1