US	UNITED STATES

Diagram / Parts List

GSB02

Cordless Pipe Belt Sander

2026/01

(US) GSB02 / Cordless Pipe Belt Sander

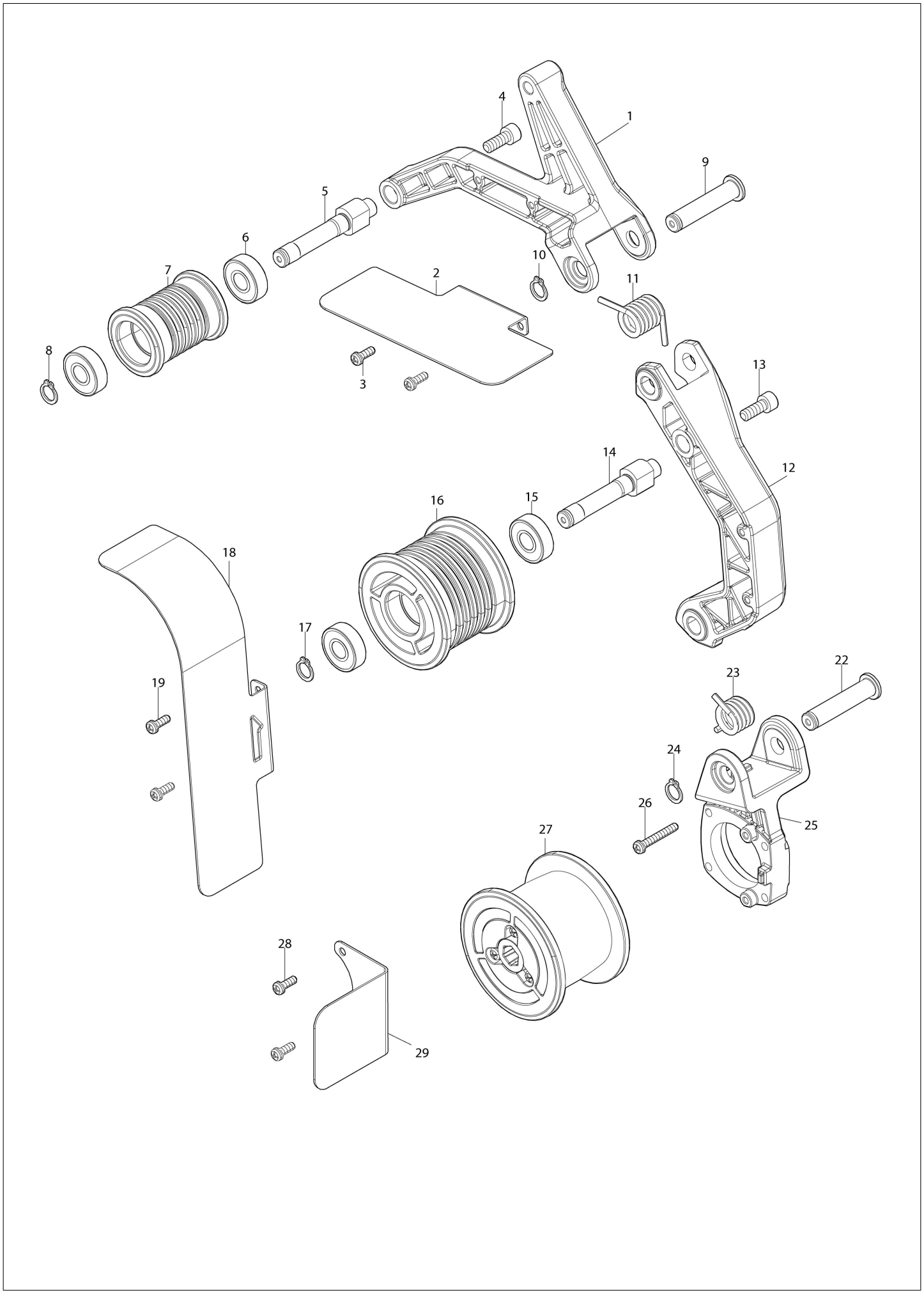

(US) GSB02 / Cordless Pipe Belt Sander

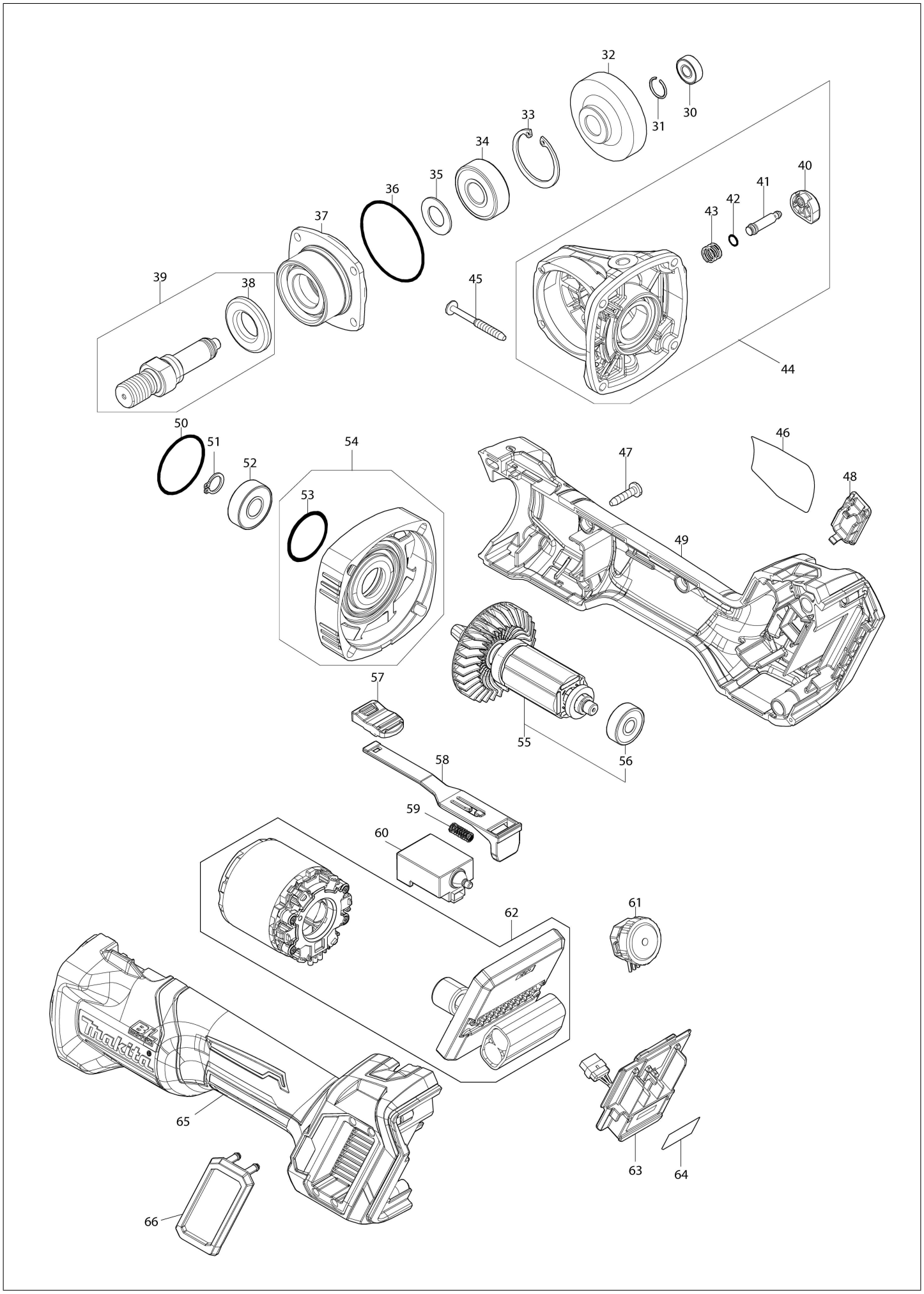

US	UNITED STATES

GSB02 / Cordless Pipe Belt Sander

Item	Sub	Parts No.	Parts Description	Qty	I/C	E/C No.	Close No.	Remark
001		312H83-9	ARM B	1				
002		347D55-1	SAFETY COVER C	1				
003		911116-5	Pan head screw M4X12 W	2				
004		265A36-4	Hex. socket head bolt M6X16	1				
005		327E84-6	ROLLER SHAFT	1				
006		210332-9	Ball bearing 6000DDW	2				
007		4132D2-1	GUIDE ROLLER A	1				
008		961006-2	Retaining ring (EXT) S-10	1				
009		256A99-1	SHOULDER PIN 10	1				
010		961006-2	Retaining ring (EXT) S-10	1				
011		232928-6	TORSION SPRING 12B	1				
012		1413R8-0	ARM A COMPLETE	1				
	C10	422C21-4	FELT A	1				
013		265A36-4	Hex. socket head bolt M6X16	1				
014		327E84-6	ROLLER SHAFT	1				
015		210332-9	Ball bearing 6000DDW	2				
016		4132D3-9	GUIDE ROLLER B	1				
017		961006-2	Retaining ring (EXT) S-10	1				
018		347D54-3	SAFETY COVER B	1				
019		911116-5	Pan head screw M4X12 W	2				
022		256A99-1	SHOULDER PIN 10	1				
023		232927-8	TORSION SPRING 12A	1				
024		961006-2	Retaining ring (EXT) S-10	1				
025		1413R7-2	HOLDER COMPLETE	1				
	C10	422C22-2	FELT B	1				
026		911151-3	Pan head screw M4X28 W	4				
027		122J04-3	DRIVING ROLLER ASSEMBLY	1				
	C10	4132R7-9	COVER	2				
	C20	911128-8	Pan head screw M4X16 WR	6				
028		911116-5	Pan head screw M4X12 W	2				
029		347D53-5	SAFETY COVER A	1				
030		210033-9	Ball bearing 696ZZ	1				
031		233950-6	Ring spring 11	1				
032		227C68-1	SPIRAL BEVEL GEAR 48	1				
033		962151-6	Retaining ring (INT) R-32	1				
034		211129-9	Ball bearing 6201DDW	1				
035		253464-9	Flat washer 12	1				
036		213622-9	O-ring 45	1				
037		312H86-3	BEARING BOX	1				
038		347640-6	Labyrinth ring	1				
039		136260-9	Spindle assembly	1				
	D10		INC. 38					
040		417771-6	Pin cap	1				
041		256546-6	Shoulder pin 4	1				
042		213960-9	O-ring 5	1				
043		233072-2	Compression spring 8	1				
044		137435-3	GEAR HOUSING ASS'Y	1				
	D10		INC. 40-43					
045		266048-4	Binding head tapping screw 4X40	4				
046		8154Y3-8	GSB02 NAME PLATE	1				
047		266326-2	Binding head tapping screw 4X18	5				
048		4132B6-9	CAP	1				
049		183W44-4	Motor housing set	1				
	C10	263005-3	Rubber pin 6	2				
	D10		INC. 65					
050		213A32-6	O-ring 32	1				
051		961006-2	Retaining ring (EXT) S-10	1				
052		211097-6	Ball bearing 6000LLB	1				
053		213445-5	O-ring 26	1				
054		136989-7	Gear housing cover assembly	1				
	D10		INC. 53					
055		519945-6	ROTOR ASS'Y	1				
	D10		INC. 56					
056		210325-6	Ball bearing 627DDW	1				
057		455447-7	Switch knob	1				

Interchange
O : Yes
X : No
< : the new part can be substituted for the current.
> : the current part can be substituted for the new.
S : Interchangeable as a set.

US	UNITED STATES

GSB02 / Cordless Pipe Belt Sander

Item	Sub	Parts No.	Parts Description	Qty	I/C	E/C No.	Close No.	Remark
058		412233-9	Switch lever	1				
059		233121-5	Compression spring 4	1				
060		651445-1	Switch FPM-1130	1				
061		620T37-7	DIAL CIRCUIT	1				
062		629D70-0	STATOR COMPLETE	1				
063		632P65-6	Terminal unit	1				
064		8154Y5-4	GSB02 SERIAL NO. LABEL	1				
065		183W44-4	Motor housing set	1				
	C10	263005-3	Rubber pin 6	2				
	D10		INC. 49					
066		422610-7	Dust cover	1				
A01		141J72-7	Grip 35 complete	1				

Interchange
O : Yes
X : No
< : the new part can be substituted for the current.
> : the current part can be substituted for the new.
S : Interchangeable as a set.