US	UNITED STATES

Diagram / Parts List

GPG01

Cordless Grease Gun

2026/02

(US) GPG01 / Cordless Grease Gun

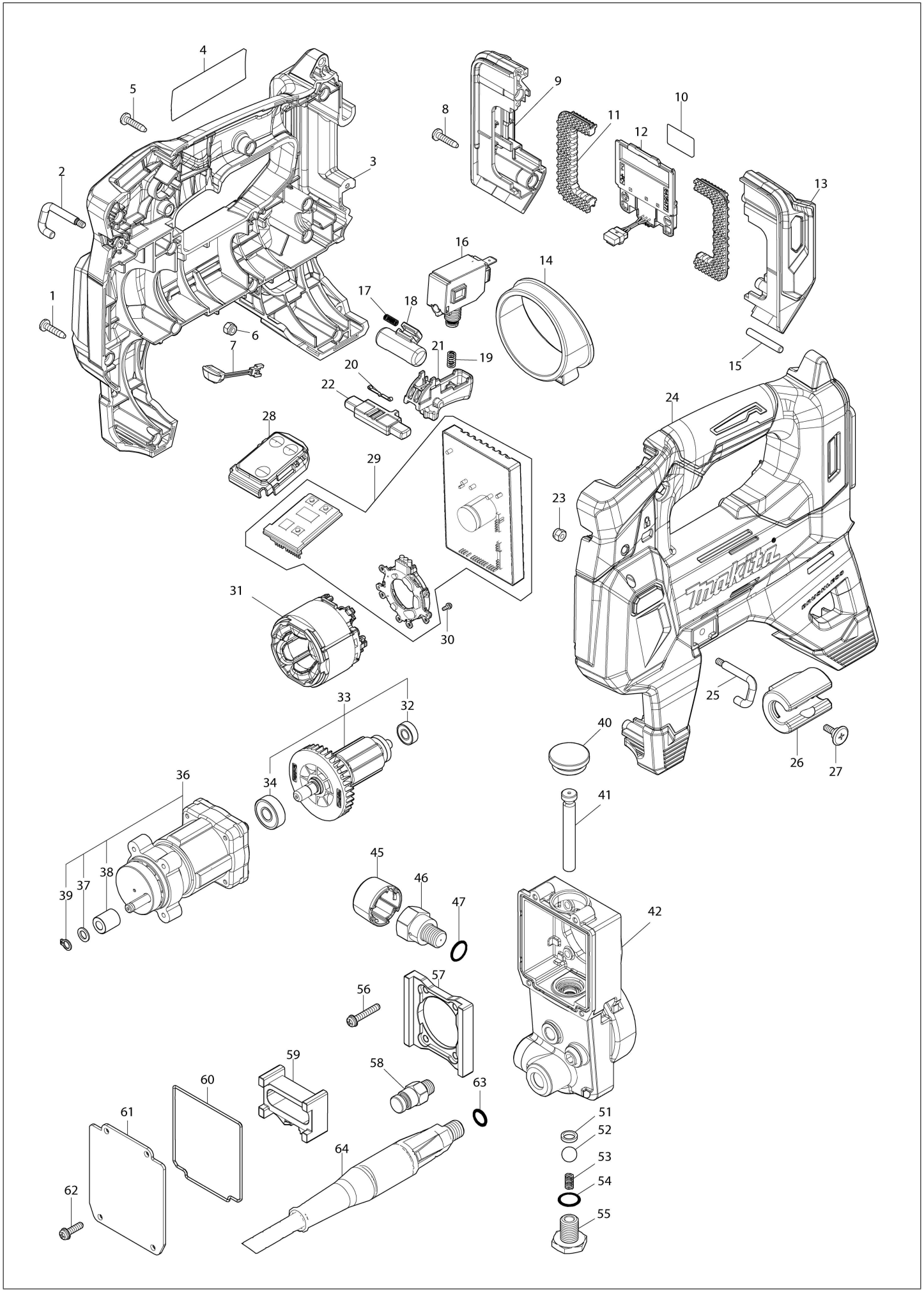

(US) GPG01 / Cordless Grease Gun

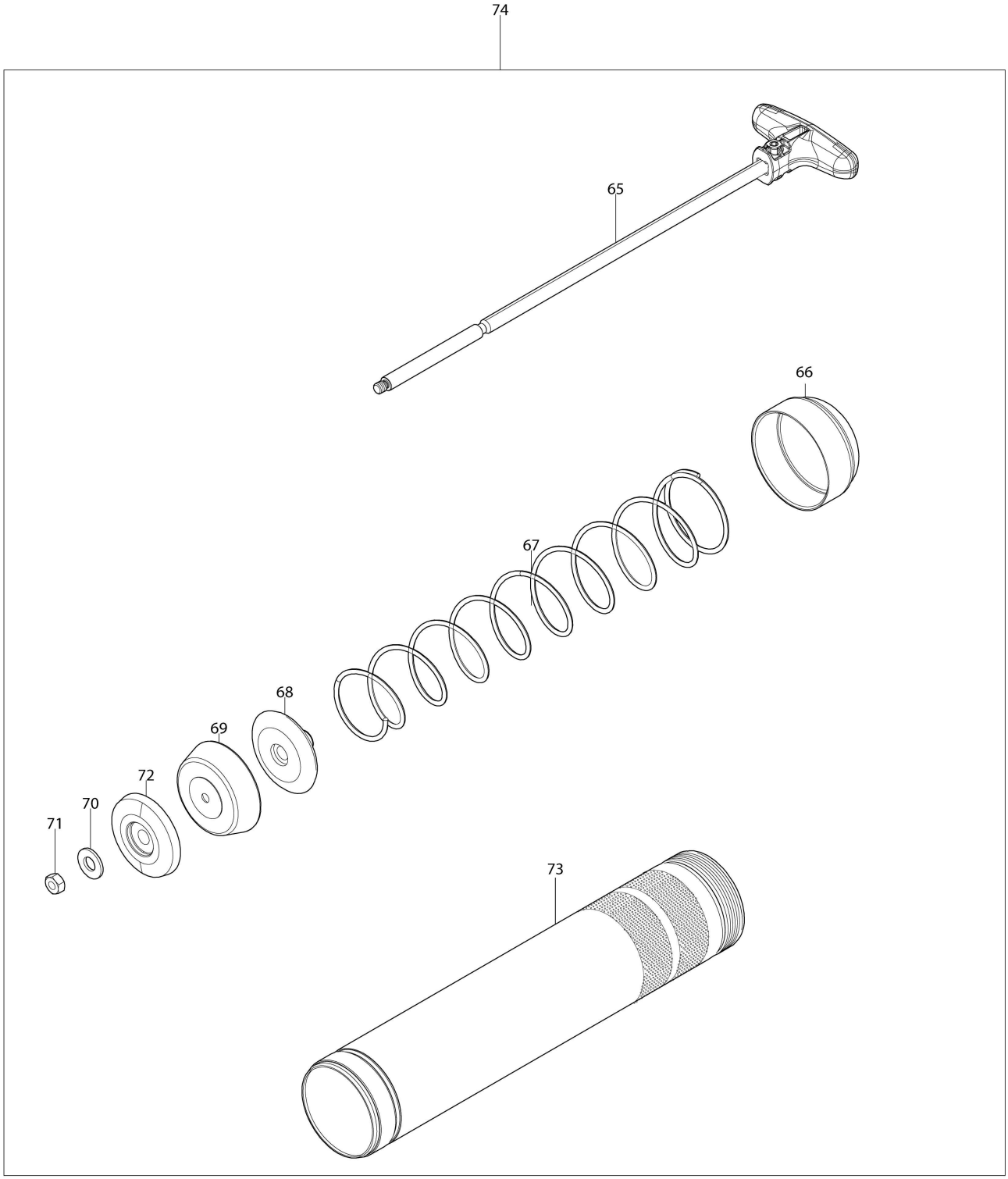

US	UNITED STATES

GPG01 / Cordless Grease Gun

Item	Sub	Parts No.	Parts Description	Qty	I/C	E/C No.	Close No.	Remark
001		266326-2	Binding head tapping screw 4X18	13				
002		327E61-8	Shoulder belt holder	1				
003		1831G4-3	HOUSING SET	1				
	C10	252126-6	Hex. lock nut M4-7	2				
	D10		INC. 24					
004		8149G9-7	GPG01 NAME PLATE	1				
005		266326-2	Binding head tapping screw 4X18	1				
006		252126-6	Hex. lock nut M4-7	1				
007		620E27-0	LED circuit	1				
008		266326-2	Binding head tapping screw 4X18	2				
009		1831F5-4	BATTERY HOUSING SET	1				
	C10	263005-3	Rubber pin 6	2				
	D10		INC. 13					
010		8149H1-0	GPG01 SERIAL NO. LABEL	1				
011		422543-6	Cushion rubber	2				
012		632P65-6	Terminal unit	1				
013		1831F5-4	BATTERY HOUSING SET	1				
	C10	263005-3	Rubber pin 6	2				
	D10		INC. 9					
014		459621-9	Barrel holder	1				
015		268306-4	Pin 5	1				
016		651391-8	Switch C3JW-6BM-PN	1				
017		231433-0	Compression spring 4	1				
018		419705-5	Lock on button	1				
019		233306-3	Compression spring 4	1				
020		232201-4	Leaf spring	1				
021		459623-5	Switch lever	1				
022		459624-3	Lock off button	1				
023		252126-6	Hex. lock nut M4-7	1				
024		1831G4-3	HOUSING SET	1				
	C10	252126-6	Hex. lock nut M4-7	2				
	D10		INC. 3					
025		327E61-8	Shoulder belt holder	1				
026		422C03-6	Hose holder	1				
027		265B56-4	Flat head shoulder screw M4X14	1				
028		1410S6-3	Switch case complete	1				
029		620R17-1	Controller	1				
030		652119-7	Pan head screw M2X6	6				
031		629C99-0	Stator	1				
032		210026-6	Ball bearing 696ZZ	1				
033		519887-4	ROTOR ASS'Y	1				
	D10		INC. 32,34					
034		210005-4	Ball bearing 608DDW	1				
036		137233-5	GEAR ASSEMBLY	1				
	D10		INC. 37-39					
037		253477-0	Flat washer 6	1				
038		214079-7	Plain bearing 6	1				
039		961002-0	Retaining ring (EXT) S-6	1				
040		286048-8	Cap 27	1				
041		256A85-2	Flat fillister head pin 8	1				
042		137384-4	PUMP HOUSING A ASS'Y	1				
	C10	422476-5	Rubber packing A	1				
045		459622-7	Valve cover	1				
046		140M83-7	Relief valve complete	1				
047		213A33-4	O-ring 12.5	1				
051		257494-2	Ring 8	1				
052		216003-6	Steel ball 10	1				
053		232557-5	Compression spring 4	1				
054		213A33-4	O-ring 12.5	1				
055		265A56-8	Hex. head bolt M12X16	1				
056		911148-2	Pan head screw M4X25 WR	4				
057		313598-1	Slider guide	1				
058		162B92-0	Drain valve	1				
059		313597-3	Slider	1				
060		422C04-4	Seal ring	1				

Interchange
O : Yes
X : No
< : the new part can be substituted for the current.
> : the current part can be substituted for the new.
S : Interchangeable as a set.

US	UNITED STATES

GPG01 / Cordless Grease Gun

Item	Sub	Parts No.	Parts Description	Qty	I/C	E/C No.	Close No.	Remark
061		347D22-6	Pump cover	1				
062		911128-8	Pan head screw M4X16 WR	4				
063		213054-0	O-ring 9	1				
064		1916S5-1	FLEXIBLE HOSE 1200 SET	1				
065		140T28-7	Shaft complete	1				
066		347543-4	Cap A	1				
067		232775-5	Conical spring	1				
068		413459-6	Plate A	1				
069		422685-6	Rubber seal A	1				
070		941201-0	Flat washer 8	1				
071		931302-2	Hex. nut M6	1				
072		413K05-1	Front plate A	1				
073		327379-7	Barrel A	1				
074		122D16-0	Barrel assembly A	1				
	D10		INC. 65-73					
A01		166094-6	Shoulder belt	1			E3128	
A01-1		162E74-0	SHOULDER BELT	1	O	E3128		
F01		1911M9-1	Extension pipe set	1				
F02		1914G9-7	Loader fitting set	1				
F03		1915E6-5	Joint set	1				
F04		1915L9-8	Adapter set (1 pc)	1				
F05		1915M0-3	Adapter set (3 pcs)	1				
F06		1915N4-2	Lock on adapter set	1				
F07		1916S5-1	FLEXIBLE HOSE 1200 SET	1				
F08		1916S7-7	FLEXIBLE HOSE 600 SET	1				
F09		1916U8-9	ANGLE ADAPTER SET	1				

Interchange
O : Yes
X : No
< : the new part can be substituted for the current.
> : the current part can be substituted for the new.
S : Interchangeable as a set.