US	UNITED STATES

Diagram / Parts List

GNB01

Cordless Framing Nailer

2026/01

(US) GNB01 / Cordless Framing Nailer

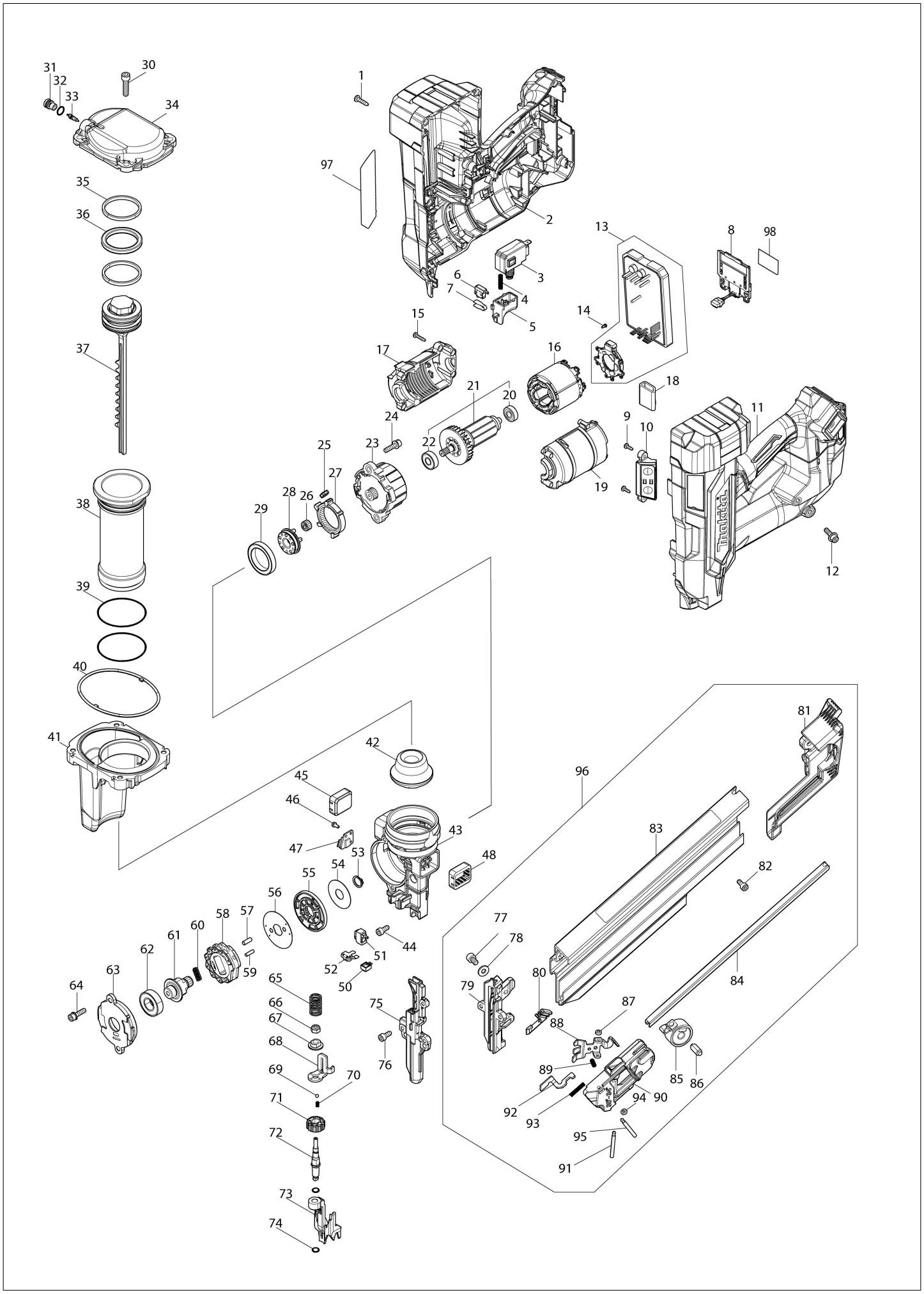

US	UNITED STATES

GNB01 / Cordless Framing Nailer

Item	Sub	Parts No.	Parts Description	Qty	I/C	E/C No.	Close No.	Remark
001		265995-6	Binding head tapping screw 4X18	12				
002		1831P4-6	Housing set	1			E2153	
	C10	263005-3	Rubber pin 6	2			E2153	
	C20	263032-0	Rubber pin 4	2			E2153	
	D10		INC. 11				E2153	
002-1		1831P4-6	Housing set	1	O	E2153		
	C10	263005-3	Rubber pin 6	2		E2153		
	C20	263032-0	Rubber pin 4	2		E2153		
	D10		INC. 11			E2153		
003		650060-8	Switch C3JR-5BM-PAND-2	1				
004		232848-4	Compression spring 4	1				
005		413X17-2	Trigger	1				
006		632V61-0	Switch unit	1				
007		232964-2	Leaf spring	1				
008		632P65-6	Terminal unit	1				
009		266007-8	Binding head tapping screw 3X10	2				
010		620S71-1	SWITCH CIRCUIT COMPLETE	1				
011		1831P4-6	Housing set	1			E2153	
	C10	263005-3	Rubber pin 6	2			E2153	
	C20	263032-0	Rubber pin 4	2			E2153	
	D10		INC. 2				E2153	
011-1		1831P4-6	Housing set	1	O	E2153		
	C10	263005-3	Rubber pin 6	2		E2153		
	C20	263032-0	Rubber pin 4	2		E2153		
	D10		INC. 2			E2153		
012		265E40-7	HEX.SOCKET HEAD SHOULDER BOLT	1				
013		620R94-3	CONTROLLER	1				
014		652119-7	Pan head screw M2X6	6				
015		266130-9	Binding head tapping screw 3X16	5				
016		629D03-5	STATOR	1				
017		1831P9-6	Motor housing set	1				
	D10		INC. 19					
018		685722-9	Sponge	1				
019		1831P9-6	Motor housing set	1				
	D10		INC. 17					
020		210169-4	Ball bearing 607LLB	1				
021		519892-1	Rotor assembly	1				
	D10		INC. 20,22					
022		210223-4	Ball bearing 608ZZ	1				
023		122H96-0	GEAR ASSEMBLY	1				
024		265853-6	Hex. socket head bolt M5X18	2				
025		422B18-7	Gear cushion	4				
026		227B54-6	Spur gear 13	5				
027		227B41-5	Internal gear 44	1				
028		141U61-8	Carrier complete	1				
029		211423-9	Ball bearing 6806DDW	1				
030		922342-1	Hex. socket head bolt M6X25	4				
031		327D23-0	Valve cap	1				
032		213007-9	O-ring 8	1				
033		243138-0	Valve core	1				
034		312E84-9	Top cap	1				
035		413X16-4	Slide ring	2				
036		213A70-8	X-ring 40	1				
037		141U59-5	Driver complete	1				
038		327D22-2	Cylinder	1				
039		213663-5	O-ring 55	2				
040		422B15-3	Seal ring	1				
041		141U65-0	Chamber complete	1				
042		422B14-5	Front cushion	1				
043		312E81-5	Nose	1				
044		251490-2	Hex. socket head bolt M5X14 WR	3				
045		422B16-1	Side cushion	1				
046		265173-8	Pan head screw M3X8	2				
047		620S90-7	SENSOR CIRCUIT	1			E3177	
047-1		620S90-7	SENSOR CIRCUIT	1	O	E3177		

Interchange
O : Yes
X : No
< : the new part can be substituted for the current.
> : the current part can be substituted for the new.
S : Interchangeable as a set.

US	UNITED STATES

GNB01 / Cordless Framing Nailer

Item	Sub	Parts No.	Parts Description	Qty	I/C	E/C No.	Close No.	Remark
048		422B16-1	Side cushion	1				
050		620R02-4	LED circuit	1				
051		137163-0	Switch assembly	1				
052		232843-4	Leaf spring	1				
053		961053-3	Retaining ring (EXT) S-13	1				
054		253595-4	Flat washer 14	1				
055		141U60-0	Holder complete	1				
056		347C07-6	Pin cover	1				
057		256A54-3	Pin 5	8				
058		327F05-4	LIFTER	1				
059		256A01-4	PIN 3.5	1				
060		232846-8	Compression spring 4	1				
061		327D05-2	Lifter shaft	1				
062		211236-8	Ball bearing 6002DDW	1				
063		312E82-3	Lifter cap	1				
064		265D66-3	Hex. socket head bolt M5X20 WG	2				
065		232847-6	Compression spring 12	1				
066		264027-6	Hex. lock nut M6-10	1				
067		327D17-5	Adjuster sleeve	1				
068		347C06-8	Contact arm	1				
069		216001-0	Steel ball 3.5	1				
070		232417-1	Compression spring 3	1				
071		413X07-5	Adjuster dial	1				
072		327D20-6	Adjuster shaft	1				
073		313673-3	CONTACT TOP	1				
074		213A98-6	O RING 5	2				
075		313503-8	Driver guide	1				
076		265D55-8	Hex. socket head bolt M5X12	2				
077		265915-0	Hex. socket head bolt M6X10	1				
078		267214-6	Flat washer 6	1				
079		313504-6	Under driver guide	1				
080		422B13-7	Pusher cushion	1				
081		413X12-2	Magazine cap	1				
082		922212-4	Hex. socket head bolt M5X12	1				
083		1411Y6-1	MAGAZINE COMPLETE	1				
	C10	8088G5-9	Caution label	1				
084		347C08-4	Nail rail	1				
085		141U43-0	Spiral spring complete	1				
086		256428-2	Shoulder pin 5-8	1				
087		262054-7	Urethane ring 3	1				
088		347C10-7	Pusher	1				
089		234084-8	Compression spring 3	1				
090		413X13-0	Pusher lever	1				
091		256A57-7	Pin 4	1				
092		347C09-2	Lock plate	1				
093		233339-8	Compression spring 3	1				
094		262054-7	Urethane ring 3	1				
095		256A57-7	Pin 4	1				
096		122J47-5	MAGAZINE ASSEMBLY	1				
	D10		INC. 77-95					
097		8152L7-7	Name plate GNB01	1				
098		8152L9-3	Serial No. label GNB01	1				
A01		141X57-7	Hook assembly	1				
A02		265D55-8	Hex. socket head bolt M5X12	3				
A03		347C14-9	Hook	1				
A04		4133Y2-4	NOSE ADAPTER	1				
A05		783202-0	Hex. wrench 4	1				
F01		1917P4-8	EXTENDED CAPACITY MAGAZINE SET	1		E0824		

Interchange
O : Yes
X : No
< : the new part can be substituted for the current.
> : the current part can be substituted for the new.
S : Interchangeable as a set.