PARTS BREAKDOWN

GHU05

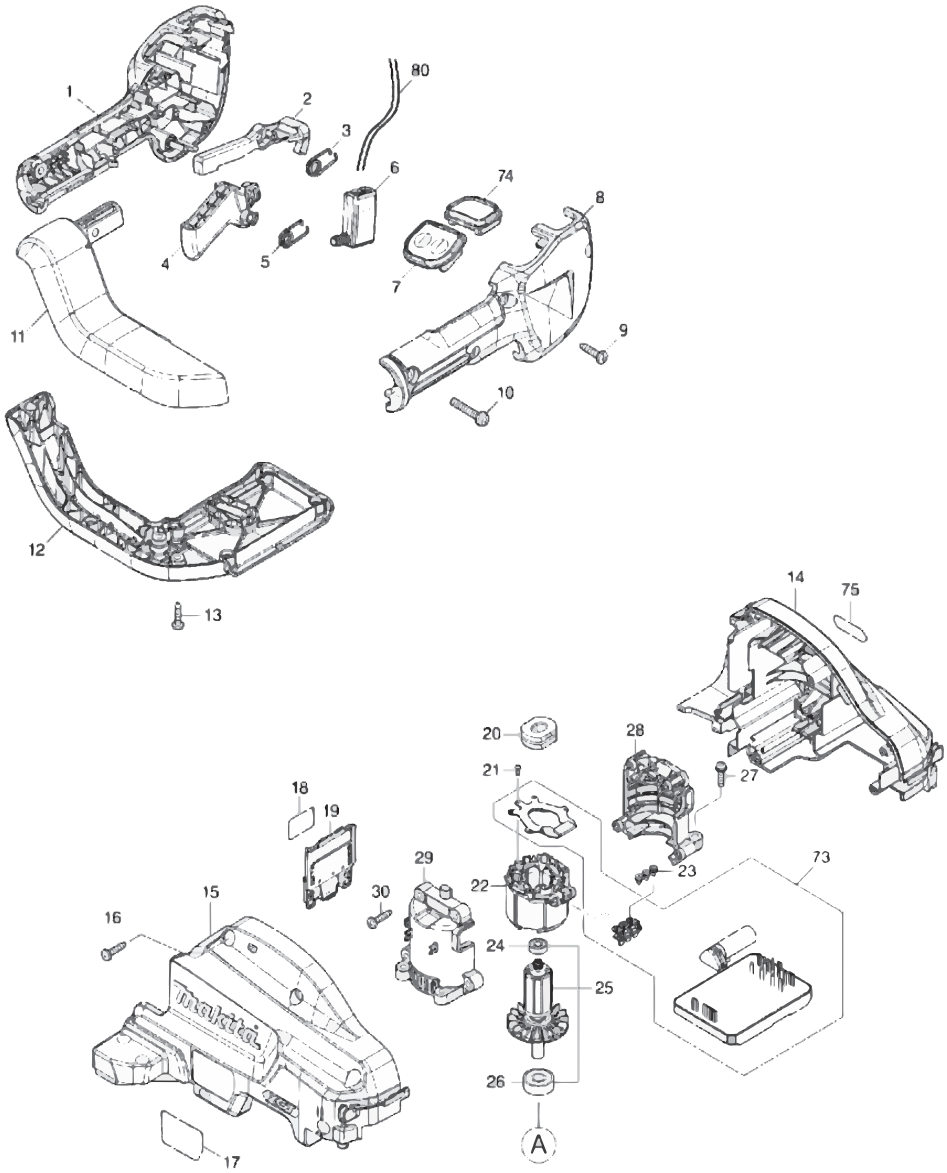
1
2
3
80
6
74
8
4
5
7
11
9
10
12
13
14
75
20
28
21
27
18
19
23
73
29
22
30
15
16
24
25
26
A
17

Products with multiple versions are listed in subsiding order with the newest version on top not indented.

Section	Fig. No.	Part No.	Description	GHU05	Tech Bulletin	Notes
1	1	183U16-7	GRIP SET	1		INC. 8
1		252180-0	HEX. LOCK NUT M5-8	1		INC WITH FIG 1 NOT PICTURED
1	2	455629-1	LOCK OFF LEVER	1		
1	3	233621-5	TORSION SPRING 9	1		
1	4	412315-7	SWITCH LEVER R	1		
1	5	233621-5	TORSION SPRING 9	1		
1	6	651083-9	SWITCH C3XA-1PSPM	1		
1	7	141D66-6	SWITCH CIRCUIT COMPLETE	1		INC. 1
1		8034K3-2	SWITCH LABEL	1		INC WITH FIG 7 NOT PICTURED
1	8	183U16-7	GRIP SET	1		
1		252180-0	HEX. LOCK NUT M5-8	1		INC WITH FIG 8 NOT PICTURED
1	9	266326-2	TAPPING SCREW 4X18	4		
1	10	911253-5	PAN HEAD SCREW M5X30	1		
1	11	413B85-3	GRIP JOINT E	1		
1	12	413B86-1	GRIP JOINT COVER E	1		
1	13	266326-2	TAPPING SCREW 4X18	8		
1	14	183U17-5	HOUSING SET	1		INC. 15
1		263005-3	RUBBER PIN 6	2		INC WITH FIG 14 NOT PICTURED
1		424344-8	DAMPER	4		INC WITH FIG 14 NOT PICTURED
1	15	183U17-5	HOUSING SET	1		INC. 14
1		263005-3	RUBBER PIN 6	2		INC WITH FIG 15 NOT PICTURED
1		424344-8	DAMPER	4		INC WITH FIG 15 NOT PICTURED
1	16	266326-2	TAPPING SCREW 4X18	5		
1	19	632P75-3	TERMINAL UNIT	1		
1	20	422261-6	RUBBER SLEEVE	1		
1	21	266490-9	TAPPING SCREW PT 2X6	3		
1	22	629A75-2	STATOR	1		
1	23	652069-6	FLAT HEAD SCREW M3X6	3		
1	24	211157-4	BALL BEARING 695ZZ	1		
1	25	519693-7	ROTOR ASSY	1		INC. 24,26
1	26	210005-4	BALL BEARING 608DDW	1		
1	27	911128-8	P.H.SCREW M4X16 WITH WR	4		
1	28	183S94-5	MOTOR HOUSING SET	1		INC. 29
1	29	183S94-5	MOTOR HOUSING SET	1		INC. 28

Products with multiple versions are listed in subsiding order with the newest version on top not indented.

Section	Fig. No.	Part No.	Description	GHU05	Tech Bulletin	Notes
1	30	266326-2	TAPPING SCREW 4X18	4		
1	73	620G85-8	CONTROLLER	1		
1	74	140W63-3	INDICATION CIRCUIT COMPLETE	1		
1	76	183U18-3	FRONT GRIP SET	1		INC. 77
1	77	183U18-3	FRONT GRIP SET	1		INC. 76
1	78	266326-2	TAPPING SCREW 4X18	2		
1	79	266420-0	TAPPING SCREW 5X20	1		
1	80	638A24-8	LEAD UNIT	1		

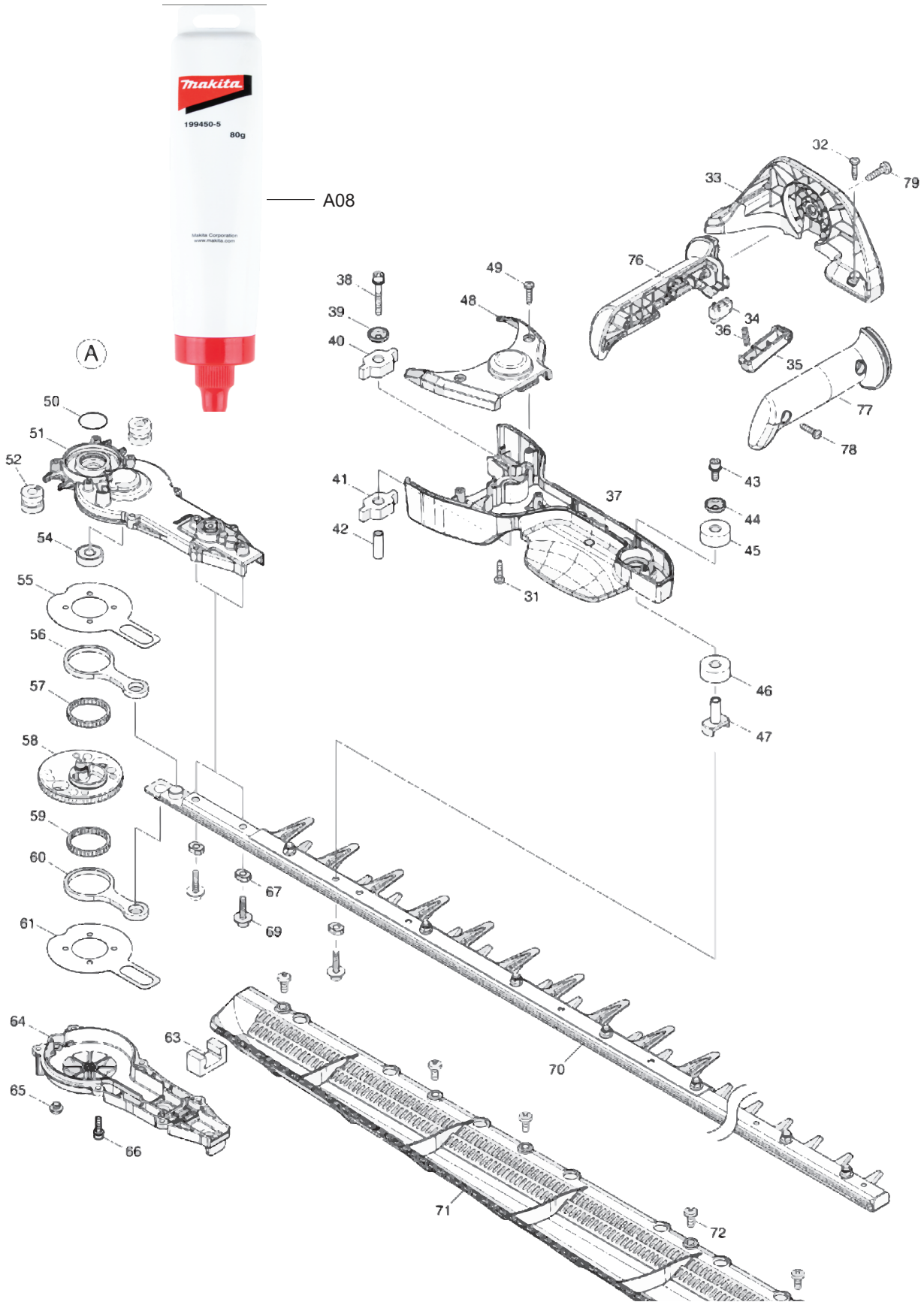
makita
199450-5
80g
A08
A
32
33
79
76
49
38
48
39
40
34
36
35
77
78
50
51
52
41
37
43
44
42
45
54
31
55
56
46
57
47
58
59
60
67
69
61
64
63
70
65
66
71
72

Products with multiple versions are listed in subsiding order with the newest version on top not indented.

Section	Fig. No.	Part No.	Description	GHU05	Tech Bulletin	Notes
2	31	266326-2	TAPPING SCREW 4X18	6		
2	32	266326-2	TAPPING SCREW 4X18	2		
2	33	413B91-8	FRONT GRIP RETAINER A	1		
2	34	632T12-1	SWITCH UNIT	1		
2	35	413B87-9	SWITCH LEVER F	1		
2	36	232353-1	COMPRESSION SPRING 4	1		
2	37	141H82-2	FRONT GRIP BASE COMPLETE	1		
2	38	251476-6	H.S.H.BOLT M5X35 WITH WR	1		
2	39	253544-1	CUP WASHER 5	1		
2	40	422260-8	RUBBER SLEEVE 8	1		
2	41	422260-8	RUBBER SLEEVE 8	1		
2	42	257678-2	SLEEVE 6	1		
2	43	922218-2	H.S.H.BOLT M5X14 WITH WR	1		
2	44	253544-1	CUP WASHER 5	1		
2	45	422813-3	RUBBER SLEEVE 8	1		
2	46	422813-3	RUBBER SLEEVE 8	1		
2	47	327919-1	CONNECTOR	1		
2	48	413B95-0	FRONT GRIP COVER	1		
2	49	266326-2	TAPPING SCREW 4X18	2		
2	50	213961-7	O RING 22	1		
2	51	141J44-2	GEAR HOUSING COMPLETE	1		
2		263002-9	RUBBER PIN 4	1		INC WITH FIG 51 NOT PICTURED
2		424344-8	DAMPER	1		INC WITH FIG 51 NOT PICTURED
2	52	422725-0	RUBBER SLEEVE 8	2		
2	54	211031-6	BALL BEARING	1		
2	55	347361-0	FRICTION PLATE	1		
2	56	347662-6	CONNECTING ROD	1		
2	57	212229-8	NEEDLE CAGE 315	1		
2	58	141C40-8	GEAR COMPLETE	1		
2	59	212229-8	NEEDLE CAGE 315	1		
2	60	347662-6	CONNECTING ROD	1		
2	61	347361-0	FRICTION PLATE	1		
2	63	443159-4	SEAL	1		
2	64	141H42-4	GEAR HOUSING COVER COMPLETE	1		

Products with multiple versions are listed in subsiding order with the newest version on top not indented.

Section	Fig. No.	Part No.	Description	GHU05	Tech Bulletin	Notes
2	65	266559-9	H.S.BUTTON HEAD BOLT M6X4	1		
2	66	922128-3	HEX. SOCKET HEAD BOLT M4X16	6		
2	67	310983-9	SLEEVE 5	3		
2	69	265A89-3	H.S.H.BOLT M5X25 WITH WR	3		
2	70	191Y05-2	SHEAR BLADE 750E SET	1		
2		310983-9	SLEEVE 5	3		INC WITH FIG 70 NOT PICTURED
2	71	191D34-9	CHIP RECEIVER 750 SET	1		
2	72	265B57-2	BINDING HEAD SCREW M5X12	5		
2	A01	413B99-2	BLADE COVER 750	1		NOT PICTURED
2	A08	199450-5	GEAR GREASE	1		