Parts Breakdown

GA9020

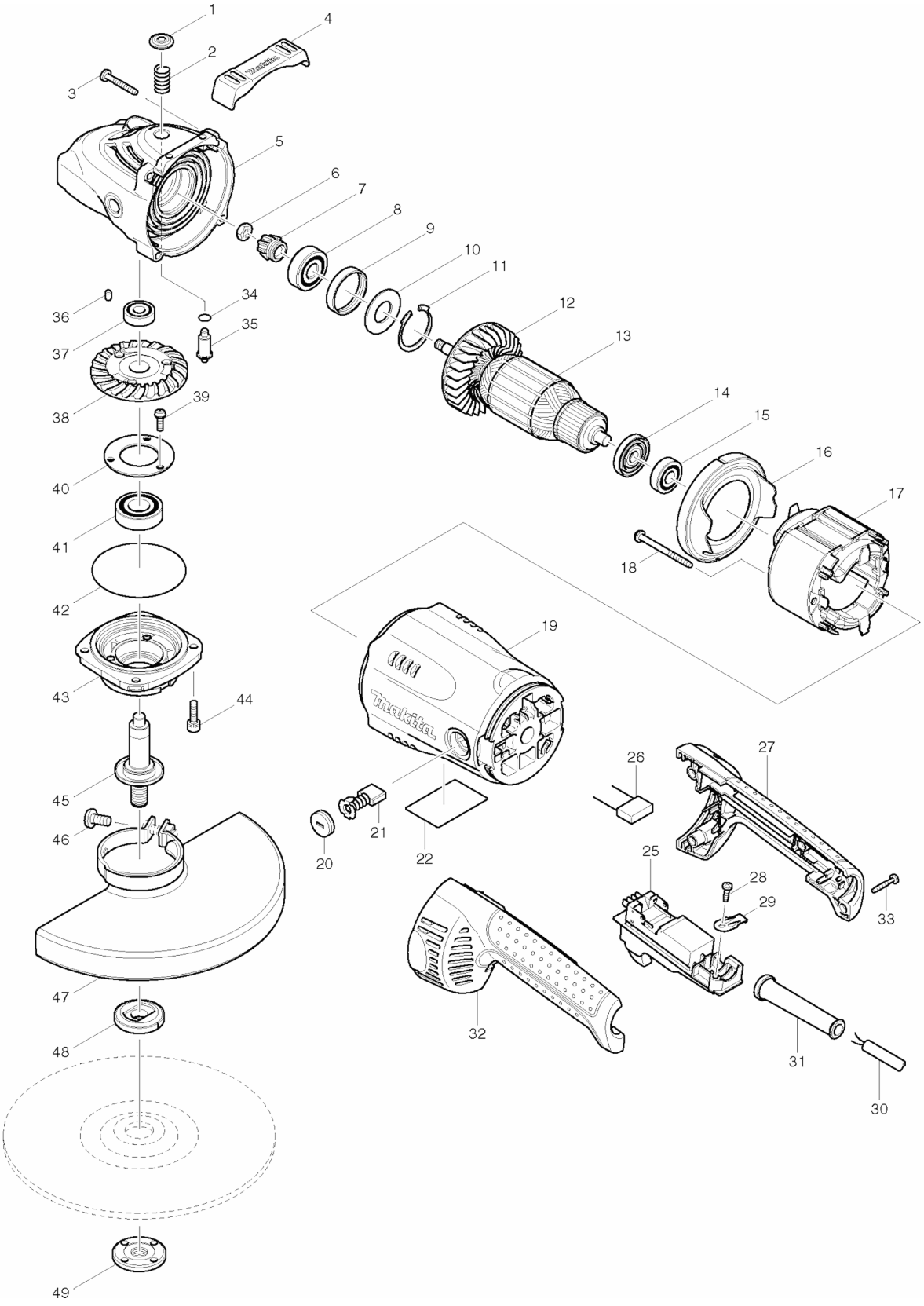

Products with multiple versions are listed in subsiding order with the newest version on top not indented

Fig #	Part ID	Part Name	Quantity
1	419133-4	PIN CAP, GA7021	1
2	233292-8	COMPRESSION SPRING 12, GA7021	1
3	266012-5	TAPPING SCREW 5X35, HR160DH	4
	266373-3	TAPPING SCREW 5X35, GA7031Y	
4	419144-9	BUMPER, GA7021	1
5	154685-5	GEAR HOUSING CPL.,GA7021	1
6	252194-9	HEX. NUT M8, GA7021	1
7	227490-4	SPIRAL BEVEL GEAR 12, GA7021	1
8	211132-0	BALL BEARING 6301DDW, GA7021	1
9	262085-6	RUBBER RING 38, GA7021	1
10	267299-2	FLAT WASHER 20, GA7021	1
11	962211-4	RETAINING RING R-42, GA7021	1
12	240081-4	FAN 80, GA7021	1
13	510124-9	N/A	1
	510087-9	ARMATURE ASS'Y 115V, GA7021	
	516941-5	ARMATURE ASS'Y 115V,GA7021	
14	681630-2	INSULATION WASHER 10, GA7021	1
15	211087-9	B. BEARING 6200DDW, 4114	1
	210075-3	BALL BEARING 6200DDW, GA7021	
16	419135-0	BAFFLE PLATE, GA7021	1
17	526176-0	FIELD ASS'Y, GA7021	1
	526156-6	FIELD ASS'Y 115V, GA7021	
18	266044-2	T. SCREW FLANGE 5X60, 5037NB	2
	266329-6	TAPPING SCREW 5X60, MT581	
19	154947-1	MOTOR HOUSING CPL.,GA7021	1
20	643700-5	BRUSH HOLDER CAP, GA7021	2
21	CB204	CARBON BRUSH SET, 194992-4	1
	194992-4	CARBON BRUSH SET, 194992-4	
	191957-7	A.C.CARBON BR.SET,CB-204,HM1800	
22	861762-3	NAME PLATE, GA9020	1
25	650101-0	SWITCH, 9067L	1
	651176-2	SWITCH, GA7021	
	651177-0	SWITCH, GA7020	
27	188059-8	HANDLE SET, GA7021	1
28	266385-6	TAPPING SCREW 4X14, GA7021	1
29	687169-3	STRAIN RELIEF, HP1621F	1
30	664463-0	CORD (2X14X8 SJ), 5007F	1
31	682560-0	CORD GUARD 10, HM1202C	1
32	188059-8	HANDLE SET, GA7021	1
33	266374-1	TAPPING SCREW 4X25, GA7021	4
34	213062-1	O RING 9, GA7021	1
35	256491-5	SHOULDER PIN 5, GA7021	1
36	263002-9	RUBBER PIN 4, 5007MG	1
37	211062-5	B. BEARING 6000ZZ, LS1016L	1
	210067-2	BALL BEARING 6000ZZ, MT240	
38	227491-2	SPIRAL BEVEL GEAR 53 A,GA7021	1
39	265120-9	PAN HEAD SCREW M5X16, GA7031Y	3
40	285724-1	BEARING RETAINER 50, GA7021	1
41	211278-2	BALL BEARING 6203DDW, GA7021	1
	211285-5	BALL BEARING 6203DDW, GA7021	
42	213760-7	O RING 78, GA7021	1
43	317988-0	BEARING BOX, GA7021	1
44	265541-5	H.S.H. BOLT M6X22, GA7021	4
45	158207-3	SPINDLE A CPLT., GA7021	1
	154683-9	SPINDLE A CPL., GA7021	
46	265158-4	P.H. SCREW M8X25, GA7021	1
47	122768-9	TOOLLESS WHEEL COVER, GA9040S	1
	154675-8	WHEEL COVER 230A CPL.,GA9020	

48	224317-9	INNER FLANGE 89, GA7021	1
49	193465-4	LOCK NUT 5/8-45, 9005B	1
	224568-4	LOCK NUT 5/8-45, 9005B	
	233946-7	RING SPRING 15, GA7021	1
	819357-6	CLEAR LABEL, GA7031Y	1
	152539-0	GRIP 36 COMPLETE, GA7021	1
	782412-6	LOCK NUT WRENCH 28, GA7911	1
	741421-B-10	9" GRINDING WHEEL 10/PK, 9609B	1
	741421-B	9 GRINDING WHEEL, 9609B,BULK	