CORDLESS DRIVER MODEL BFH040SAE

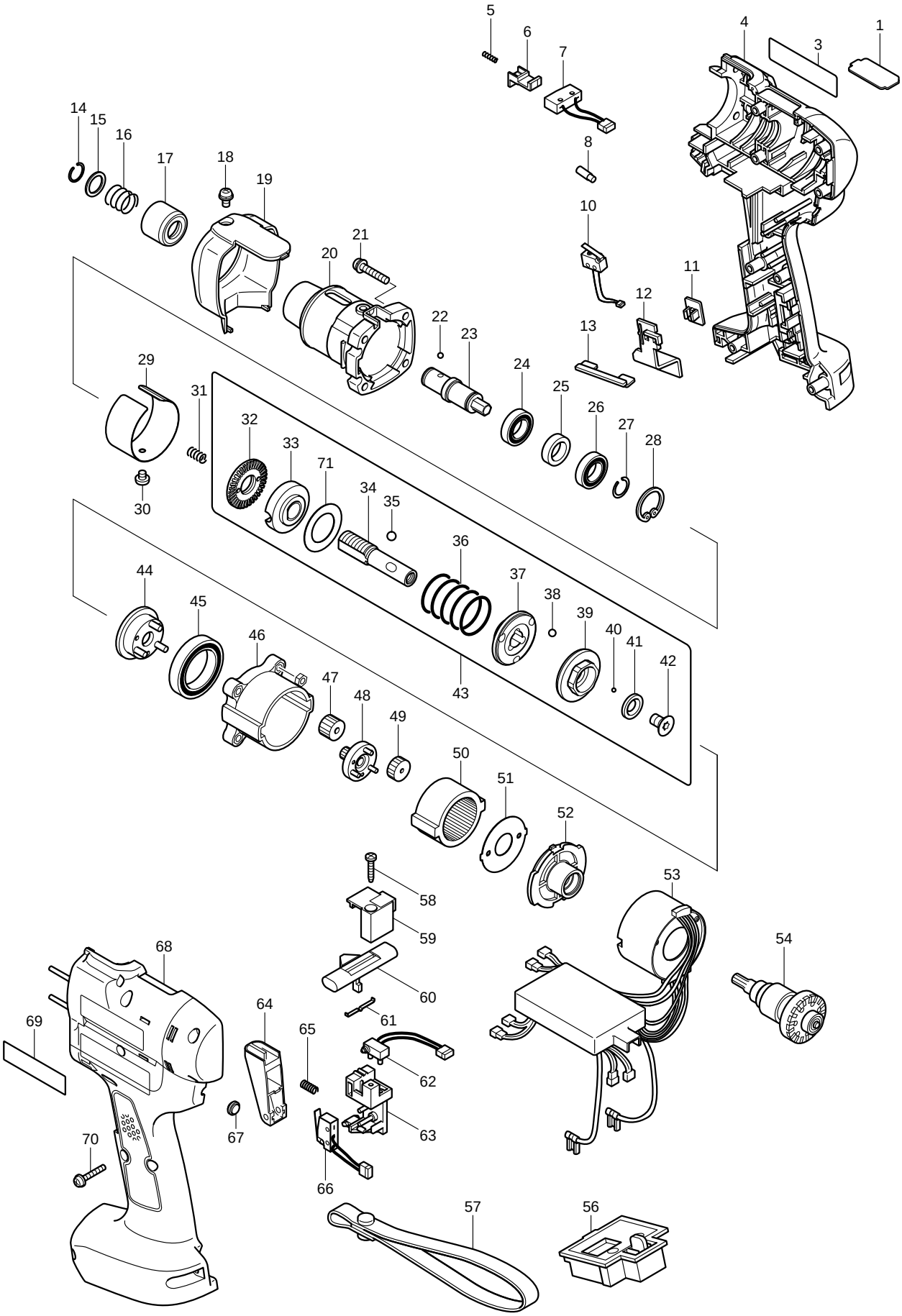

Item No.	Part No.	Qty. Used	Description
1	345330-5	1	PLATE D
3	817576-8	1	CAUTION LABEL
4	183622-2	1	HOUSING SET (INCL. FIG. 68, 69)
5	233025-1	1	COMPRESSION SPRING 2
6	418002-6	1	SWITCH LEVER
7	638274-9	1	SWITCH UNIT
8	263013-4	1	RUBBER PIN 4
10	638273-1	1	SWITCH UNIT
11	418210-9	1	SWITCH LEVER B
12	418208-6	1	LEVER GUIDE
13	418209-4	1	SPACER
14	231965-7	1	RING SPRING 10
15	267143-3	1	FLAT WASHER 11
16	233005-7	1	COMPRESSION SPRING 13
17	162218-2	1	SLEEVE
18	911108-4	1	PAN HEAD SCREW M4X8
19	418289-0	1	CLUTCH CASE COVER
20	317694-7	1	CLUTCH CASE
21	911143-2	4	PAN HEAD SCREW M4X22
22	216019-1	2	STEEL BALL 3
23	324377-2	1	SPINDLE M
24	211136-2	1	BALL BEARING 6801LLB
25	257011-8	1	RING 12
26	211136-2	1	BALL BEARING 6801LLB
27	231951-8	1	RING SPRING 11
28	962111-8	1	RETAINING RING R-21
29	345346-0	1	RING 38D
30	265127-5	1	+ PAN HEAD SCREW M4X4
31	233019-6	1	COMPRESSION SPRING 5
32	324281-5	1	LOCK NUT M12
33	153442-8	1	ADJUST RING COMPLETE
34	324296-2	1	SPINDLE
35	216018-3	3	STEEL BALL 5.0
36	233385-1	1	COMPRESSION SPRING 19D
37	223146-7	1	CAM D
38	216024-8	3	STEEL BALL 4
39	223143-3	1	CAM C
40	216019-1	13	STEEL BALL 3
41	267247-1	1	FLAT WASHER 7
42	266305-0	1	TORX C.S HEAD SCREW M5X10
44	153444-4	1	CARRIER COMPLETE B
45	211375-4	1	BALL BEARING 6805LLB
46	418004-2	1	GEAR CASE
47	227052-8	3	SPUR GEAR 18
48	153448-6	1	SPUR GEAR 9 COMPLETE B
49	227051-0	3	SPUR GEAR 19
50	227048-9	1	INTERNAL GEAR 47
51	267774-8	1	LOCK WASHER
52	418003-4	1	MOTOR BRACKET
53	631544-5	1	MOTOR CONTROL UNIT
54	619123-9	1	ROTOR
56	643983-7	1	TERMINAL
57	163400-6	1	HANDSTRAP
58	266130-9	1	TAPPING SCREW BIND PT 3X16
59	418204-4	1	COVER
60	418201-0	1	F/R CHANGE LEVER
61	232201-4	1	LEAF SPRING
62	638276-5	1	SWITCH UNIT
63	418202-8	1	SWITCH BASE
64	418203-6	1	SWITCH LEVER A
65	231397-8	1	COMPRESSION SPRING 4
66	638275-7	1	SWITCH UNIT
67	416764-0	1	LENS
68	183622-2	1	HOUSING SET (INCL. FIG.4, 69)
69	819063-3	1	MAKITA LABEL
70	911038-9	8	PAN HEAD SCREW M3X20
71	267276-4	1	FLAT WASHER 18

ACCESSORIES

43	125215-9	1	CLUTCH ASS'Y D (INCL. FIG. 32~42, & 71)
A01	DC14SA	1	DC14SA CHARGER
A02	193346-2	2	BATTERY BH1220
A03	183664-6	1	STEEL CARRYING CASE (INCL. 819143-5 MAKITA LABEL)
A04	765025-8	1	TORQUE ADJUST TOOL